CrustBuster
SPEED KING INC.

3800
Caddy/Coulter Drill
OWNER'S MANUAL

OPERATION • MAINTENANCE • REPAIR PARTS

WARRANTY

WARRANTY: In addition to the implied warranties of fitness and of merchantability, CrustBuster/Speed King, Inc. warrants new products sold by it to be free from defects in workmanship and material for a period of 12 months, from the date of delivery to the first user customer. Warranty on purchased parts (cylinders, blades, bearings, shanks, etc.) will be the same as that offered by the appropriate manufacturer of these parts.

EXCLUSIONS: No warranty of any kind is made by CrustBuster/Speed King, Inc. with regard to new products which have been subject to operation in excess of recommended capacities, misuse, abuse, negligence, or accident, or have been altered or repaired in any manner not authorized by CrustBuster/Speed King, Inc. CrustBuster/Speed King, Inc. is constantly striving to improve its products. Changes in design and improvement will be made whenever CrustBuster/Speed King, Inc. believes the efficiency of its products will be improved thereby, but without incurring any obligation to incorporate such improvements in any products which have been shipped or are in service. No obligation exists for compensation of unauthorized repairs or modifications without prior approval. And in no event will CrustBuster/Speed King, Inc. be liable for consequential damages, such as but not limited to: downtime, delayed or late tillage or planting, etc.

WARRANTY REGISTRATION: This warranty is not valid unless registered with CrustBuster/Speed King, Inc. within 10 days from the date of purchase. It is the sole responsibility of the selling retail dealer to fill out the registration forms and see that they are properly filed with CrustBuster/Speed King, Inc.

WARRANTY PROCEDURE: Should any part fail to conform with this warranty, CrustBuster/Speed King, Inc. will repair or replace the part or parts which do not conform. If a part is defective, take it to your authorized CrustBuster Farm Equipment Dealer immediately, along with your warranty registration, and complete the proper forms requesting a warranty adjustment. Our representative will pick up the part to be returned to the factory for examination. If the customer (first user) requests that a new part be substituted for the old part, a new part will be charged to the dealer who will in turn charge the customer. If the part is found by us to be defective, a credit for the part will be given to the dealer to be passed on to the customer. If the dealer or customer wishes to repair the part, this will be done only if authorized by CrustBuster/Speed King, Inc. This warranty procedure is in addition to all remedies authorized by law.

CRUSTBUSTER/SPEED KING, INC.
Box 1438
Dodge City, KS 67801

Specifications are subject to change without notice.

BE A SAFE OPERATOR
BY THINKING BEFORE ACTING
AND
BY READING
YOUR OWNER'S MANUAL

Avoid Accidents

Most accidents, whether they occur in industry, on the farm, at home, or on the highway, are caused by the failure of some individual to follow simple and fundamental safety rules or precautions. For this reason most accidents can be prevented by recognizing the real cause and doing something about it before the accident occurs.

Regardless of the care used in the design and construction of any type of equipment, there are many conditions that cannot be completely safeguarded against without interfering with reasonable accessibility and efficient operation.

A Careful Operator
Is the Best Insurance Against an Accident.
The complete observance of one simple rule
would prevent many thousands
of serious injuries each year.

That rule is:

Never Attempt to Clean, Oil or Adjust
A Machine While It Is In Motion.

To Our Customers

The following pages and illustrations are printed to help supply you with the knowledge to better operate and service your new CrustBuster equipment.

We are proud to have you as a customer and feel you will be proud to be a CrustBuster owner.

Any piece of equipment needs, and must have, a certain amount of service and maintenance to keep it in top running condition. We have attempted to cover all the adjustments required to fit most conditions; however, there may be times when special care must be taken to fit a condition.

Study this owner's manual carefully and become acquainted with all the adjustments and operating procedures before attempting to operate your new equipment. Remember, it is a machine and has been designed and tested to do an efficient job in most operating conditions and will perform in relation to the services it receives.

If special attention is required for some condition, ask your CrustBuster dealer; he will be glad to help and answer any questions on operations and service of your new machine.

TAKE TIME FOR SAFETY

Table of Contents

Introduction

Dealer Pre-Delivery
and Customer Registration ..... Blue index card
Machinery Cautions 2
Operating Cautions 3
Field Operating Checklist 3

Section 1: 3800 Drill

Lubrication and Service 4
Tire Pressure 5
Scraper Adjustment 5
Offset Blade Gap Adjustment 5
Seed Cup Adjustments 5
Population Charts 6
Seeding Rate Charts 7

Section 2: Caddy/Coulter Unit

No-Till Concepts 18
Lubrication and Service 19
Tire Inflation 19
Adjusting Coulter Depth and Coulter Bar Lockout .. 19
Leveling Coulter Bar and Drill 20
Caddy Three Point Hitch 20
Initial Field Settings 20
Firming Wheel Adjustment 21
Finishing Harrow Use 21
Special Operating Tips 22

Section 3: Caddy/Scratcher Unit

Caddy/Scratcher Concept 23
Lubrication and Service 23
Tire Inflation 23
Depth Adjustment 23

Section 4: Assembly Instructions

3800 Drill 24
Caddy/Coulter Unit 25
Finishing Harrow 27
Caddy Scratcher Unit 28
Hydraulic Markers 30

Section 5: Conversion Procedure

No-Till to Conventional Conversion Procedure 31

Section 6: Scale Drawings & Parts Listings

3800 Drill 33
3800 Opener 35
Caddy 37
15' & 20' Spring Tine Harrow 39
Scratcher 40
3800 Legume Box Option 41
3800 Drill Hydraulic Fold Over Marker 43
Marker Blade Assembly 44
15' Double Marker 45
20' Double Marker 45
15' Single Marker 46
20' Single Marker 46
2" x 13" Press Wheel Assembly 47
2" x 13" Peaked Press Wheel Assembly 47
1" x 12" Press Wheel Assembly—Complete 48
3" x 13" Press Wheel Assembly 48
3" x 13" Press Wheel Assembly 48
Coulter Spindle & Hub Assmbly 49
Spindle & Hub Assembly 49
Double Disc Blade Assembly—Left 50
Double Disc Blade Assembly—Right 50
Cross 4" x 12" Hydraulic Cylinder 51
Cross 4" x 8" Hydraulic Cylinder 51

Section 1: 3800 Drill

Lubrication and Service

Proper maintenance will extend the life of your drill. Refer to the drawing (Fig. 6-1) on page 30 for lubrication requirements. Use a high quality grease in bearings. On greasable sealed bearings, be careful not to over grease and destroy the dirt seal. Pay attention to recommended intervals. Do not attempt to service your drill while it is motion. Oil chains when they are warm from use, and only when stopped. A light penetrating oil or powdered graphite should be used on seed cup rotors initially and at the end of each season.

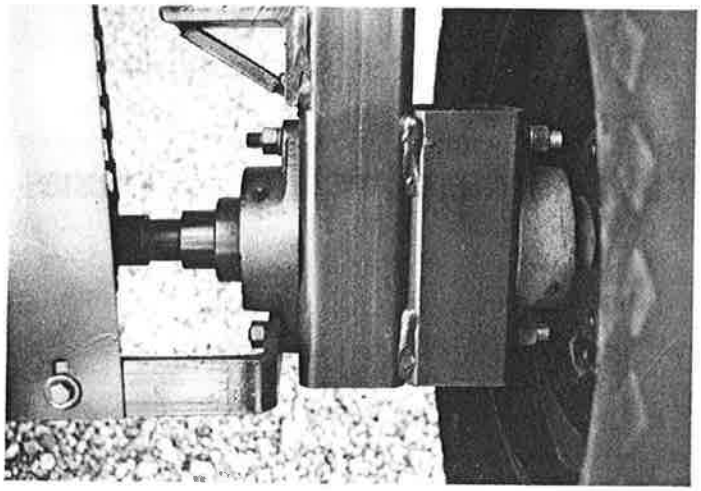

FIGURE 1-1—Drive wheel bearings, sealed greasable, 500 acres

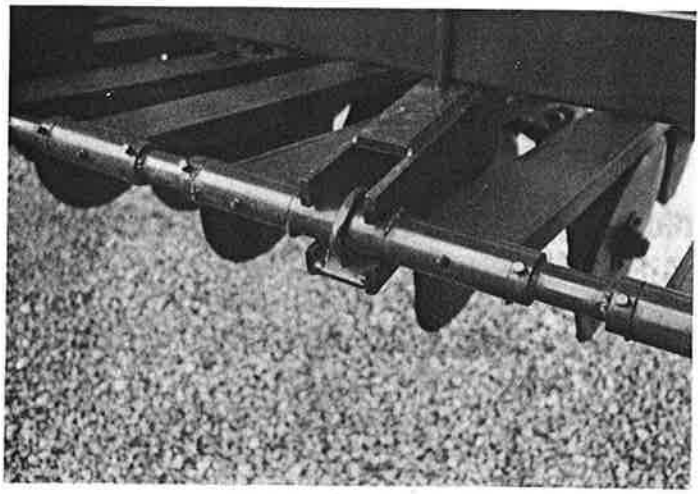

FIGURE 1-2—Opener pull bar pivots, daily

Transport and Storage

When storing the 3800 mounted drill only, use the rear support jacks at each end of the drill. During field use, they may be removed from the lower stub and placed on the upper stub for clearance. If the 3800 drill is carried with the CrustBuster caddy, each jack will be used to store the entire unit and avoid rear end tipping.

If the 3800 mounted drill is carried by a tractor, be sure the lower linkage pins are in place, or the locking mechanism on a quick-attach 3-point system is secured. If carrying the drill on a CrustBuster caddy, be sure the sliding lock pins are fully engaged over the lower linkage hitch pins as shown.

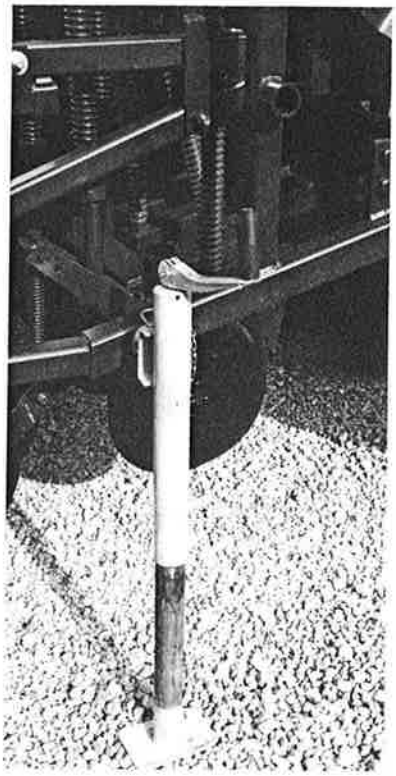

FIGURE 1-3—Rear drill jack

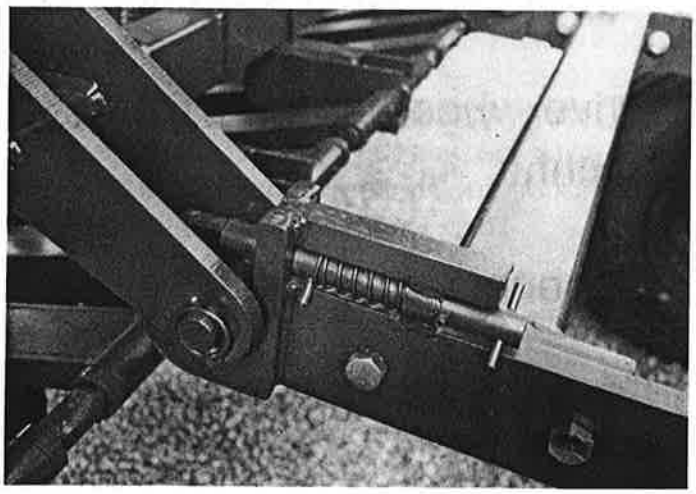

FIGURE 1-4—Lower linkage lock pins

Before Operating This Equipment

Remove caddy transport straps before attempting to operate hydraulic cylinders.

Remove support stands before transporting or operating drill.

Remove transport pin on coulter bar before operating hydraulic cylinder.

If transporting drill while box is full, turn drive wheels manually before drilling to assure that packing has not stopped seed flow.

Field Operating Checklist

- ❑ Drill is hooked secure to tractor or caddy three point hitch; lock pins in place.
- ❑ Three point center link is adjusted for level drill operation.
- ❑ Tires at recommended air pressure.
- ❑ Lubrication as required.
- ❑ Seed shafts turned manually to check for obstructions and improper chain alignment on drive sprockets.
- ❑ Correct sprocket selection and rotor slot width for seed planted.
- ❑ Drive wheel turnbuckle set to provide adequate opener movement.
- ❑ Opener down pressure spring adjusted for field conditions.
- ❑ Record starting number for acre meter.
- ❑ Lower drill while moving to avoid plugging opener and seed tube.

Tire Pressure

Drive tires must be 9:5L x 15" implement tires inflated to 32# for seeding charts and acre counter to be accurate.

Scraper Adjustment

Opener blade scrapers may be adjusted when they do not adequately remove dirt. Loosen the hex nut holding the scraper and slide in or out to maintain clearance. Refer to opener drawing (Fig. 6-2) on page 32.

Offset Blade Gap

Opener blade gap may be changed as blades wear by removing the shim washers behind the disc bearing. Allow 1/8" minimum clearance when the blades are out of the ground. Inadequate clearance will increase wear on the lead blade and necessitate quicker replacement. Refer to opener drawing (Fig. 6-2) on page 32.

Note: The right blade is secured with a right-hand threaded bolt and the left blade with a left-hand threaded bolt.

Seed Cup Adjustments

Refer to seed cup drawing (Fig. 1-5) for proper adjustment if repairs have been performed on individual seed cups or the seed cup shaft. To verify that all openers are set the same on the shaft, start with all rotors fully closed. A slight crack between rotors would be considered normal tolerance. With a piece of square stock (i.e. 1/2") or similar device of known width, insert into rotor and close rotor slot using the adjusting handle until the measuring device is snug in slot. Before removing measuring device, check indicator gauge to determine if the gauge reads the same as the slot width just set. If not, adjust gauge accordingly. Next, make certain the bearing located on adjustment lever is securely running between the wobble slot adjustment bushing bracket. Adjusting bushing must be set screwed tightly to the shaft with zero to 1/64" tolerance between the side of the adjusting bushing and bearing sides. Undue tolerance in this area will allow the seed shaft rotor to float from right to left, thus opening and closing rotor slot and varying the seed rate. Once the desired width is set, finer settings can now be made by moving the adjusting handle. To close the feed slot with grain in the box, close the slot down a maximum of 1/8" and then rotate the shaft one turn to clear the slot of jammed grain. Repeat this until the desired slot width is selected.

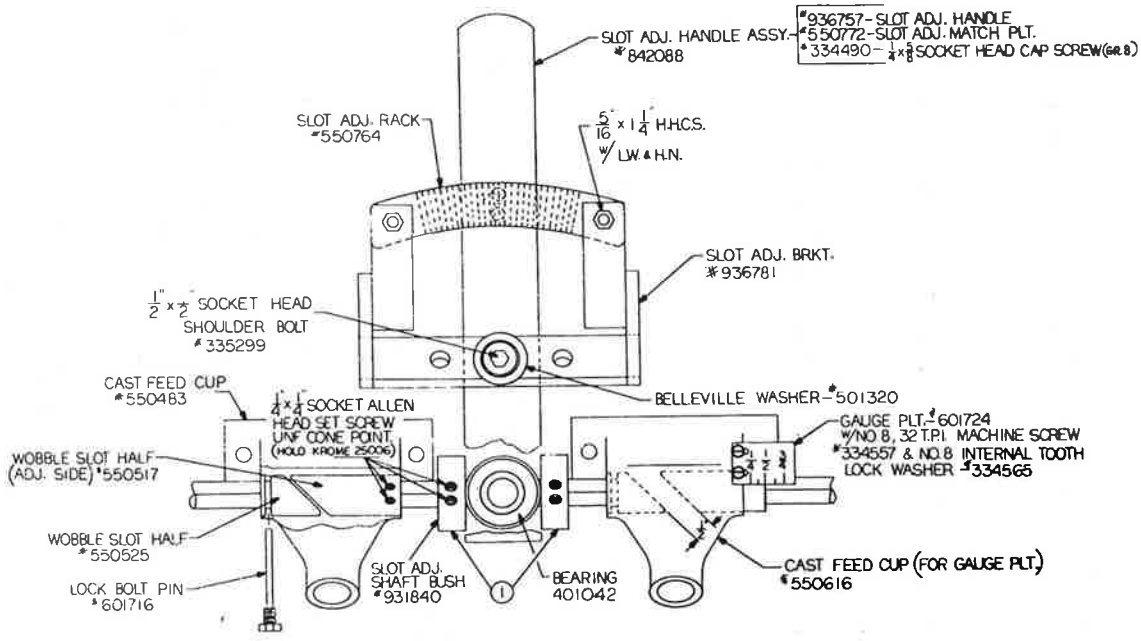

FIGURE 1-5

TABLE 1—PLANT POPULATIONS PER ACRE AT VARIOUS ROW SPACINGS

Plants Per Foot of Row	SPACING BETWEEN ROWS 7.5 in.	8 in.	10 in.	14 in.	18 in.	20 in.	40 in.
20	1,792,180	1,306,800	1,045,440	746,740	580,800	522,700	261,360
18	1,612,962	1,176,120	940,896	672,066	522,720	470,530	235,244
15	1,344,128	980,100	784,080	560,055	435,600	392,025	196,020
12	1,075,308	784,080	627,264	448,044	348,044	313,620	156,816
10	896,090	653,400	522,720	373,370	290,400	261,350	130,680
9	806,480	588,060	470,448	336,033	261,360	235,315	117,612
8	716,864	522,720	418,176	298,320	209,080	104,544	
7	627,264	457,380	265,904	261,359	203,280	182,945	91,476
6	537,654	392,040	313,632	224,022	174,240	156,816	78,408
5	448,044	326,700	261,360	186,685	145,200	130,675	65,340
4	358,432	261,360	209,088	149,358	116,160	104,540	52,272
3	268,826	196,020	156,816	112,011	87,120	78,405	39,204
2	179,216	130,080	104,544	74,674	58,080	52,272	26,136
1	89,610	65,340	52,272	37,337	29,040	26,136	13,068

Table 2—Soybeans—Seeding Rate Based on lbs. of Seed Per Acre Desired Viable Seeds/Acre

Seeds/Pounds	150,000	175,000	200,000	225,000
2,000	75	88	100	113
2,100	71	84	95	107
2,200	68	80	91	102
2,300	65	76	87	98
2,400	63	73	83	94
2,500	60	70	80	90
2,600	58	67	77	87
2,700	56	65	74	83
2,800	54	63	71	80
2,900	52	60	69	78
3,000	50	58	67	75
3,100	48	56	65	73
3,200	46	54	63	70
3,300	45	52	61	68
3,400	44	51	59	66
3,500	43	50	57	64
3,600	42	49	56	63
3,700	40	47	54	61
3,800	39	46	53	59
3,900	38	45	51	58

To compensate for germination use the following formula:
Desired lbs/Acre
% Germination = Actual lbs/Acre Required.

Example: 65 lbs/A desired ÷.65 = 72 lbs/A
90% germination .9 required

Table 3—Stand Counts*

No. of Plants	One (1) Sq. Yard	Plants (Thousands)/Acre "Hula Hoop" (inside diameter) 30"	31"	32"	33"	34"	35"	36"	37"	38"
1	4.8	8.9	8.3	7.8	7.3	6.9	6.5	6.2	5.8	5.5
10		89	83							
11		98	91	86						
12		107	100	94	88	83				
13		116	108	101	95	90	85			
14		124	116	109	103	97	91	86		
15		133	125	117	110	104	98	92	88	
16		142	133	125	117	110	104	99	93	89
17		151	141	133	125	117	111	105	99	94
18	87	160	150	140	132	124	117	111	105	100
19	92	169	158	148	139	131	124	117	111	105
20	97	178	166	156	147	138	130	123	117	111
21	102	187	175	164	154	145	137	129	123	116
22	106	196	183	172	161	152	143	136	128	122
23	111	204	191	179	167	159	150	142	134	127
*24	116	213	200	187	176	166	157	148	140	133
25	121	222	208	195	183	173	163	154	146	138
26	126		216	203	191	179	170	160	152	144
27	131		224	211	198	186	176	166	158	149
28	136			218	205	193	183	173	163	155
29	140			226	213	200	189	179	169	161
30	145				220	207	196	185	175	166
*31	150					214	202	191	181	172
32	155					221	209	197	187	177
33	160						215	203	193	183
34	165						222	209	199	188
35	169							216	204	194
36	174							222	210	199
37	179								216	205
38	184								222	214
39	189									216
40	193									221
41	198									
42	203									

***Examples:** 1) If you count 31 plants per square yard, your plant population is 150,000 per acre. 2) If you count 24 plants inside a 34" (inside diameter) "Hula Hoop," your plant population is 166,000 per acre. In either case, make at least 10 random counts per field.

© copyright BASF 1989

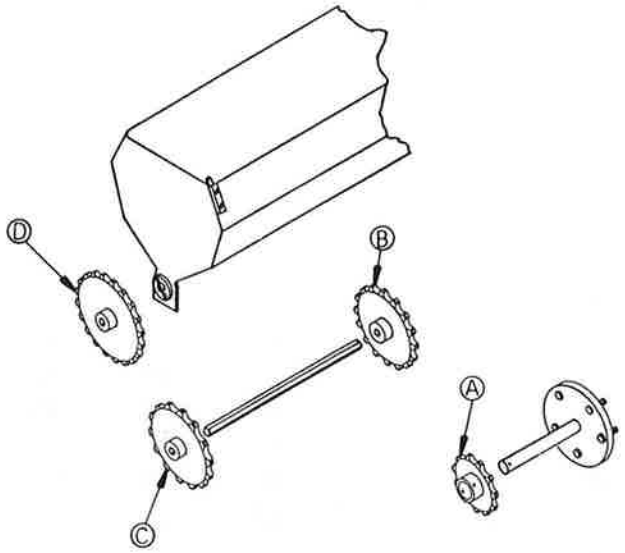

Sprocket Arrangment
FIGURE 1-2

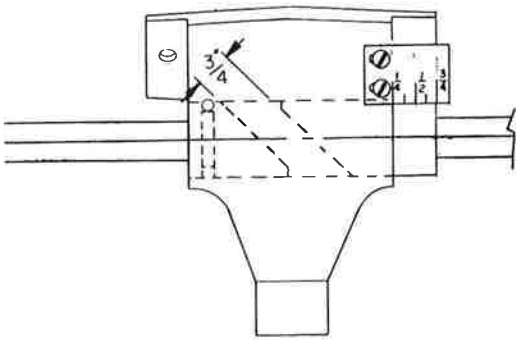

Feed Slot Settings
FIGURE 1-3

Seed Charts

ALFALFA Seeding Rate

Note: Rates are based on 60 pounds per bushel.

SPROCKETS				SEEDING RATES (POUNDS PER ACRE)								
				7 1/2" Spacing			8" Spacing			10" Spacing		
A	B	C	D	1/8" Slot	1/4" Slot	Slot	1/8" Slot	1/4" Slot	Slot	1/8" Slot	1/4" Slot	Slot
14	46	12	46	3	5		2	5		2	4	
14	37	12	46	4	6		4	6		3	5	
14	32	12	46	4.5	7		4. 5	7		3.5	6	
14	25	12	46	6	10		5	9		4	7	
23	37	12	46	6	10		6	10		5	8	
23	32	12	46	7	12		7	11		5.5	9	
23	25	12	46	9	15		9	15		7	12	
23	25	12	37	11	19		11	18		9	15	
23	37	25	46	13	22		12	21		10	16	
23	32	25	46	15	26		14	24		11	19	
23	37	32	46	17	28		15	26		12	21	
23	32	25	37	18	31		17	30		14	24	
23	32	37	46	22	38		21	35		16	28	
23	25	32	46	24	42		23	39		18	31	
23	25	37	46	28	48		26	45		21	36	
23	25	32	37	30	52		28	48		23	39	
23	32	46	37	34	58		25	44		32	54	
23	25	37	32	41	69		38	65		30	52	
23	25	46	37	43	74		41	70		33	56	
23	25	46	32	50	86		47	81		38	64	

BARLEY Seeding Rate

SPROCKETS

Note: Rates are based on 48 pounds per bushel.

SEEDING RATES (POUNDS PER ACRE)

				7 1/2" Spacing			8" Spacing			10" Spacing		
				1/2"	5/8"	3/4"	1/2"	5/8"	3/4"	1/2"	5/8"	3/4"
A	B	C	D	Slot	Slot	Slot	Slot	Slot	Slot	Slot	Slot	Slot
23	37	12	46	14	16	19	12	16	18	10	12	14
23	32	12	46	15	18	22	14	18	22	11	14	17
23	25	12	46	19	24	29	18	23	26	14	18	22
23	25	12	37	24	30	35	23	28	34	18	23	26
23	37	25	46	27	34	40	25	31	38	20	25	30
23	32	25	46	32	39	47	29	36	44	24	29	35
23	37	32	46	34	43	52	32	41	48	26	32	38
23	32	25	37	39	48	58	36	46	54	29	36	43
23	32	37	46	46	58	69	43	54	65	35	43	52
23	25	32	46	51	64	77	48	60	72	38	48	58
23	25	37	46	59	74	88	55	70	83	44	55	66
23	25	32	37	63	80	95	60	74	89	48	60	72
23	32	46	37	72	90	107	67	84	101	54	67	80
23	25	37	32	86	106	128	80	100	120	64	79	96
23	25	46	37	91	114	138	86	107	128	68	85	103
23	25	46	32	106	131	158	100	124	149	79	98	119
23	25	46	25	135	169	202	127	158	190	102	127	152
23	25	25	12	154	191	230	144	179	215	115	144	173
23	25	32	12	197	245	294	185	229	276	148	184	221
23	25	37	12	227	283	340	214	265	319	170	212	254

BOX AGITATOR MAY BE REQUIRED FOR SEEDING BARLEY

CANOLA Seeding Rate

SPROCKETS

Note: Rates are based on 52 pounds per bushel.

SEEDING RATES (POUNDS PER ACRE)

				7 1/2" Spacing			8" Spacing			10" Spacing		
				3/16"	1/4"	3/8"	3/16"	1/4"	3/8"	3/16"	1/4"	3/8"
A	B	C	D	Slot	Slot	Slot	Slot	Slot	Slot	Slot	Slot	Slot
14	46	12	46	4	5	8	4	5	7.5	3	4	6
14	37	12	46	4.5	7	9	4.5	6	9	3.5	5	7
14	32	12	46	5	8	11	5	8	10	4	6	8
14	25	12	46	7	10	14	7	9	13	5.5	7.5	11
23	37	12	46	8	11	15	7.5	10	14.5	6	8	12
23	32	12	46	9	13	18	8	12	17	7	10	13.5
23	25	12	46	11	16	23	11	15	22	9	12	17
23	25	12	37	14	20	29	13	19	27	11	15	22
23	37	25	46	16	23	32	15	22	30	12	17	24
23	32	25	46	18	27	37	17	25	35	14	20	28
23	37	32	46	20	29	41	19	27	39	16	22	31
23	32	25	37	23	33	46	21	31	43	18	25	35
23	32	37	46	27	39	55	26	36	52	20	29	41
23	25	32	46	30	43	61	28	40	57	23	32	46
23	25	37	46	36	50	71	33	47	67	25	38	53

Seed treatment may reduce seeding rate by 10 percent.

CORN Seeding Rate **Note: Rates are based on 56 pounds per bushel.**

SPROCKETS				SEEDING RATES (POUNDS PER ACRE)								
				7 1/2" Spacing			8" Spacing			10" Spacing		
				1/2"	5/8"	3/4"	1/2"	5/8"	3/4"	1/2"	5/8"	3/4"
A	B	C	D	Slot	Slot	Slot	Slot	Slot	Slot	Slot	Slot	Slot
23	37	12	46	7	10	12	7	9	11	5	7	9
23	32	12	46	8	11	14	8	11	13	6	9	10
23	25	12	46	10	14	18	10	14	17	8	11	13
23	25	12	37	13	18	22	12	17	21	10	14	16
23	37	25	46	14	21	25	14	19	23	11	15	19
23	32	25	46	17	24	29	16	22	27	13	18	22
23	37	32	46	18	26	32	17	25	30	14	20	24
23	32	25	37	21	30	36	20	28	33	16	22	27
23	32	37	46	25	35	42	23	33	40	19	26	32
23	25	32	46	27	39	47	26	37	44	21	29	35
23	25	37	46	32	45	54	30	42	51	24	34	41
23	25	32	37	34	49	58	32	45	55	26	36	44
23	32	46	37	38	54	66	36	51	62	29	41	49
23	25	37	32	46	65	78	43	61	73	34	49	59
23	25	46	37	49	70	84	46	65	79	37	52	63
23	25	46	32	57	81	98	53	76	91	43	60	73
23	25	46	25	73	103	125	68	97	117	55	77	93
23	25	25	12	82	117	141	77	110	132	62	88	106
23	25	32	12	106	150	181	99	140	169	79	112	135
23	25	37	12	122	173	209	114	162	196	91	130	156

COTTON Seeding Rate **Note: Rates are based on 48 pounds per bushel.**

SPROCKETS				SEEDING RATES (POUNDS PER ACRE)								
				7 1/2" Spacing			8" Spacing			10" Spacing		
				1/2"	5/8"	3/4"	1/2"	5/8"	3/4"	1/2"	5/8"	3/4"
A	B	C	D	Slot	Slot	Slot	Slot	Slot	Slot	Slot	Slot	Slot
23	37	12	46	10	11	14	9	11	14	7	9	11
23	32	12	46	11	14	17	10	13	16	8	10	13
23	25	12	46	14	17	22	13	16	20	11	13	16
23	25	12	37	18	22	26	17	20	25	13	16	20
23	37	25	46	20	24	30	19	23	28	15	18	23
23	32	25	46	23	28	35	22	26	33	17	21	26
23	37	32	46	26	31	38	24	29	36	19	23	29
23	32	25	37	29	34	43	27	33	41	22	26	32
23	32	37	46	34	42	51	32	39	48	26	31	39
23	25	32	46	38	46	57	36	43	53	29	34	43
23	25	37	46	44	53	66	41	50	62	33	40	49
23	25	32	37	47	57	71	44	53	67	36	43	53
23	32	46	37	54	64	80	50	60	75	40	48	60
23	25	37	32	63	76	95	59	71	89	48	57	71
23	25	46	37	68	82	102	64	77	96	51	61	76
23	25	46	32	78	94	118	74	89	111	59	71	88
23	25	46	25	101	121	121	94	113	142	76	91	113
23	25	25	12	114	137	171	107	128	160	86	103	128
23	25	32	12	146	175	218	137	164	205	110	132	164
23	25	37	12	169	203	253	158	190	237	127	152	190

FESCUE Seeding Rate

SPROCKETS

Note: Rates are based on 22 pounds per bushel.

SEEDING RATES (POUNDS PER ACRE)

				7½" Spacing			8" Spacing			10" Spacing		
				3/8"	1/2"	5/8"	3/8"	1/2"	5/8"	3/8"	1/2"	5/8"
A	B	C	D	Slot	Slot	Slot	Slot	Slot	Slot	Slot	Slot	Slot
14	46	12	46	2.5	3	5	2	3	4	2	3	3
14	37	12	46	3	5	6	3	4	5	2.5	3.5	4
14	32	12	46	4	5.5	6.5	3.5	5	6	3	4	5
14	25	12	46	5	6.5	8	4	6	8	4	5	6
23	37	12	46	6	7	10	5	7	9	4.5	5.5	7
23	32	12	46	7	8	11	6	8	10	5	6	8
23	25	12	46	8	10	14	7	10	13	6	8	10
23	25	12	37	10	14	17	9	13	16	7	10	13
23	37	25	46	11	15	19	10	14	18	8	11	15
23	32	25	46	13	18	22	12	16	21	9	13	17
23	37	32	46	14	19	25	13	18	23	11	15	19
23	32	25	37	16	22	28	15	20	26	12	16	21
23	32	37	46	18	26	33	18	24	31	14	19	25
23	25	32	46	21	29	37	19	27	34	16	21	27
23	25	37	46	24	33	42	22	31	40	18	25	32
23	25	32	37	26	35	46	24	33	43	19	27	34
23	32	46	37	29	40	51	27	37	48	22	30	38
23	25	37	32	34	47	61	32	45	57	26	36	46
23	25	46	37	37	51	66	35	48	61	28	38	49
23	25	46	32	43	59	76	40	55	71	32	44	57

MILLET Seeding Rate

SPROCKETS

Note: Rates are based on 50 pounds per bushel.

SEEDING RATES (POUNDS PER ACRE)

				7½" Spacing			8" Spacing			10" Spacing		
				1/8"	1/4"		1/8"	1/4"		1/8"	1/4"	
A	B	C	D	Slot	Slot	Slot	Slot	Slot	Slot	Slot	Slot	Slot
14	46	12	46	2.5	5		2	4		1.5	3	
14	37	12	46	3	6		3	5		2	4	
14	32	12	46	3.5	7		3.5	6		2.5	5	
14	25	12	46	4	8		4	8		3	6	
23	37	12	46	5	10		4.5	9		3.5	7	
23	32	12	46	6	11		5	10		4	8	
23	25	12	46	6.5	14		6	13		5	10	
23	25	12	37	8	17		8	16		6	13	
23	37	25	46	10	19		9	18		7	14	
23	32	25	46	11	22		10	21		8	17	
23	37	32	46	12	25		11	23		9	19	
23	32	25	37	14	28		13	26		10	21	
23	32	37	46	16	33		15	31		12	25	
23	25	32	46	18	37		17	34		13	27	
23	25	37	46	21	42		19	40		15	32	
23	25	32	37	22	46		21	43		17	34	
23	32	46	37	25	51		23	48		19	38	
23	25	37	32	30	61		28	57		22	46	
23	25	46	37	32	66		30	61		24	49	
23	25	46	32	37	75		35	71		28	57	

MILO Seeding Rate **Note: Rates are based on 56 pounds per bushel.**

SPROCKETS				SEEDING RATES (POUNDS PER ACRE)								
				7 1/2" Spacing			8" Spacing			10" Spacing		
				1/4"	3/8"	1/2"	1/4"	3/8"	1/2"	1/4"	3/8"	1/2"
A	B	C	D	Slot	Slot	Slot	Slot	Slot	Slot	Slot	Slot	Slot
14	46	12	46	3	6	8	3	6	8	3	5	6
14	37	12	46	4	8	10	4	8	10	3.5	6	8
14	32	12	46	5	10	12	5	9	11	4	7	9
14	25	12	46	6	12	15	6	11	14	4.5	9	12
23	37	12	46	7	13	17	7	12	16	5	10	13
23	32	12	46	8	15	20	8	14	19	6	11	15
23	25	12	46	10	19	26	10	18	24	8	15	19
23	25	12	37	13	24	31	12	23	29	10	18	24
23	37	25	46	15	27	35	14	26	33	11	21	27
23	32	25	46	17	32	41	16	30	39	13	24	31
23	37	32	46	19	35	46	18	33	43	14	26	34
23	32	25	37	22	39	51	20	37	48	16	30	38
23	32	37	46	26	47	61	24	44	57	19	35	46
23	25	32	46	26	52	67	26	49	63	21	39	51
23	25	37	46	33	60	78	31	56	73	24	45	58
23	25	32	37	35	65	84	33	61	79	26	49	63
23	32	46	37	39	73	94	37	68	88	30	55	71
23	25	37	32	47	86	112	44	81	105	35	65	84
23	25	46	37	50	93	121	47	87	113	38	70	90
23	25	46	32	58	108	139	55	101	131	44	81	104

OATS Seeding Rate **Note: Rates are based on 32 pounds per bushel.**

SPROCKETS				SEEDING RATES (POUNDS PER ACRE)								
				7 1/2" Spacing			8" Spacing			10" Spacing		
				1/2"	5/8"	3/4"	1/2"	5/8"	3/4"	1/2"	5/8"	3/4"
A	B	C	D	Slot	Slot	Slot	Slot	Slot	Slot	Slot	Slot	Slot
23	37	12	46	8	10	12	8	10	11	6	8	9
23	32	12	46	10	12	14	9	12	13	7	9	11
23	25	12	46	12	16	18	11	15	17	9	12	13
23	25	12	37	15	20	22	14	18	21	11	15	17
23	37	25	46	18	22	26	16	21	24	13	17	19
23	32	25	46	20	26	30	19	24	27	15	19	22
23	37	32	46	22	29	32	21	27	30	17	21	24
23	32	25	37	25	32	36	23	30	34	19	24	27
23	32	37	46	30	38	43	28	36	41	22	29	32
23	25	32	46	33	42	48	31	40	45	25	32	36
23	25	37	46	38	49	55	35	46	52	28	37	42
23	25	32	37	41	53	59	38	49	56	30	39	45
23	32	46	37	46	59	67	43	55	63	34	44	50
23	25	37	32	54	70	80	51	66	75	41	53	60
23	25	46	37	58	75	86	55	71	80	44	57	64
23	25	46	32	67	87	99	63	82	93	51	65	74
23	25	46	25	86	112	126	81	105	119	65	84	95
23	25	25	12	98	126	143	92	119	134	73	95	108
23	25	32	12	126	162	184	117	152	172	94	121	138
23	25	37	12	145	187	212	136	175	199	109	140	159

BOX AGITATOR MAY BE REQUIRED FOR SEEDING OATS. 78 Tooth Sprocket is a special order sprocket.

PINTO BEANS Seeding Rate

Note: Rates are based on 56 pounds per bushel.

SPROCKETS				SEEDING RATES (POUNDS PER ACRE)								
				7 1/2" Spacing			8" Spacing			10" Spacing		
A	B	C	D	1/2" Slot	5/8" Slot	3/4" Slot	1/2" Slot	5/8" Slot	3/4" Slot	1/2" Slot	5/8" Slot	3/4" Slot
23	37	12	46	9	11	14	8	10	13	6	8	10
23	32	12	46	10	13	16	9	12	15	7	10	12
23	25	12	46	13	17	20	12	16	19	9	12	15
23	25	12	37	15	21	25	15	19	23	12	15	19
23	37	25	46	18	23	28	16	22	26	13	17	21
23	32	25	46	20	27	33	19	25	31	15	20	24
23	37	32	46	22	30	36	21	28	34	17	22	27
23	32	25	37	26	34	41	24	31	38	19	25	30
23	32	37	46	30	40	48	28	37	45	23	30	36
23	25	32	46	34	44	54	31	41	50	25	33	40
23	25	37	46	38	51	62	36	48	58	29	38	46
23	25	32	37	42	55	66	39	51	62	31	41	50
23	32	46	37	46	62	74	44	58	70	35	46	56
23	25	37	32	55	74	89	52	69	83	42	55	67
23	25	46	37	59	79	95	56	74	89	45	59	72
23	25	46	32	69	91	110	65	86	103	52	68	83
23	25	46	25	88	117	142	83	110	132	66	88	106
23	25	25	12	100	132	160	94	124	150	75	99	120
23	25	32	12	128	170	205	120	159	192	96	127	154
23	25	37	12	148	196	237	138	184	222	111	147	178

RICE Seeding Rate

Note: Rates are based on 45 pounds per bushel.

SPROCKETS				SEEDING RATES (POUNDS PER ACRE)								
				7 1/2" Spacing			8" Spacing			10" Spacing		
A	B	C	D	1/2" Slot	5/8" Slot	3/4" Slot	1/2" Slot	5/8" Slot	3/4" Slot	1/2" Slot	5/8" Slot	3/4" Slot
23	37	12	46	12	14	17	11	14	16	9	11	13
23	32	12	46	14	17	19	13	16	18	10	13	15
23	25	12	46	18	22	25	16	20	24	13	16	19
23	25	12	37	22	26	31	20	25	29	16	20	23
23	37	25	46	24	30	35	23	28	33	18	23	26
23	32	25	46	28	35	41	26	33	38	21	26	31
23	37	32	46	31	38	45	29	36	42	23	29	34
23	32	25	37	35	43	50	33	41	48	26	33	38
23	32	37	46	42	52	61	39	49	57	31	39	45
23	25	32	46	46	58	67	43	54	63	34	43	50
23	25	37	46	53	66	78	50	62	73	40	50	58
23	25	32	37	57	71	83	54	67	78	43	53	62
23	32	46	37	64	80	94	60	75	88	48	60	70
23	25	37	32	76	95	111	72	89	104	57	71	83
23	25	46	37	82	102	119	77	96	112	62	77	90
23	25	46	32	95	118	138	89	111	130	71	89	104
23	25	46	25	122	151	177	114	142	166	91	114	133
23	25	25	12	138	171	200	129	161	188	103	129	150
23	25	32	12	176	220	256	165	206	240	132	165	192
23	25	37	12	204	254	297	191	238	278	153	190	222

RYE Seeding Rate **Note: Rates are based on 56 pounds per bushel.**

SPROCKETS				SEEDING RATES (POUNDS PER ACRE)								
				7 1/2" Spacing			8" Spacing			10" Spacing		
				1/2"	5/8"	3/4"	1/2"	5/8"	3/4"	1/2"	5/8"	3/4"
A	B	C	D	Slot	Slot	Slot	Slot	Slot	Slot	Slot	Slot	Slot
23	37	12	46	17	22	27	15	20	26	12	16	20
23	32	12	46	19	25	31	18	23	30	14	18	24
23	25	12	46	24	31	40	23	30	38	18	24	30
23	25	12	37	30	39	50	28	37	47	23	29	38
23	37	25	46	34	44	57	32	42	53	26	33	43
23	32	25	46	39	51	66	37	48	62	30	38	49
23	37	32	46	44	57	73	41	53	68	33	43	55
23	32	25	37	49	64	82	46	60	77	37	48	61
23	32	37	46	58	76	98	55	71	91	44	57	73
23	25	32	46	65	84	108	61	79	101	49	63	81
23	25	37	46	75	97	125	70	91	117	56	73	93
23	25	32	37	81	105	134	75	98	126	60	78	100
23	32	46	37	90	118	150	85	110	141	68	88	113
23	25	37	32	107	140	179	101	131	168	81	105	134
23	25	46	37	116	150	193	108	141	180	87	113	144
23	25	46	32	134	174	222	125	163	209	100	130	167
23	25	46	25	171	222	285	161	208	267	128	167	214
23	25	25	12	194	251	322	182	236	302	145	189	242
23	25	32	12	248	322	413	233	302	387	186	242	310
23	25	37	12	287	372	478	269	349	448	215	279	358

SOYBEANS Seeding Rate — 2500 Seeds Per Pound **Note: Rates are based on 60 pounds per bushel.**

SPROCKETS				SEEDING RATES (POUNDS PER ACRE)								
				7 1/2" Spacing			8" Spacing			10" Spacing		
				1/2"	5/8"	3/4"	1/2"	5/8"	3/4"	1/2"	5/8"	3/4"
A	B	C	D	Slot	Slot	Slot	Slot	Slot	Slot	Slot	Slot	Slot
23	37	12	46	9	11	15	8	10	14	7	8	11
23	32	12	46	10	13	17	9	12	16	8	9	13
23	25	12	46	13	16	22	12	15	21	10	12	17
23	25	12	37	16	20	28	15	19	26	12	15	21
23	37	25	46	19	23	31	18	21	29	15	17	23
23	32	25	46	22	26	36	20	25	34	17	20	27
23	37	32	46	24	29	40	22	27	37	18	22	30
23	32	25	37	28	32	45	25	30	42	20	24	34
23	32	37	46	32	39	53	30	36	50	24	29	40
23	25	32	46	35	42	59	33	40	55	27	32	44
23	25	37	46	40	50	68	38	46	63	31	37	51
23	25	32	37	44	53	73	41	50	69	33	40	55
23	32	46	37	49	60	82	46	56	77	37	45	62
23	25	37	32	59	71	98	55	67	92	45	53	73
23	25	46	37	63	76	105	59	72	99	48	57	79
23	25	46	32	71	88	122	68	83	114	55	66	91
23	25	46	25	94	113	156	88	106	146	71	84	117
23	25	25	12	107	128	176	100	120	165	80	95	132
23	25	32	12	136	164	225	128	154	212	102	123	169
23	25	37	12	158	190	260	148	178	245	119	142	196

Seed treatment may reduce seeding rate by 10%.

SOYBEANS Seeding Rate—3000 Seeds Per Pound **Note: Rates are based on 60 pounds per bushel.**

SPROCKETS				SEEDING RATES (POUNDS PER ACRE)								
				7 1/2" Spacing			8" Spacing			10" Spacing		
A	B	C	D	1/2" Slot	5/8" Slot	3/4" Slot	1/2" Slot	5/8" Slot	3/4" Slot	1/2" Slot	5/8" Slot	3/4" Slot
23	37	12	46	9	11	14	8	10	13	7	8	11
23	32	12	46	10	12	17	9	12	15	8	10	12
23	25	12	46	13	16	21	12	15	20	10	12	16
23	25	12	37	17	20	26	16	19	24	13	15	20
23	37	25	46	19	22	30	18	21	28	15	17	22
23	32	25	46	22	26	34	20	24	32	17	20	25
23	37	32	46	24	29	38	23	27	35	18	22	28
23	32	25	37	28	32	42	25	30	40	21	24	32
23	32	37	46	32	39	51	31	36	47	24	29	38
23	25	32	46	36	42	56	34	40	53	27	32	42
23	25	37	46	41	50	65	39	46	61	31	37	48
23	25	32	37	44	53	69	42	50	65	33	40	52
23	32	46	37	50	59	78	47	56	73	37	45	58
23	25	37	32	59	70	92	56	66	87	45	53	69
23	25	46	37	64	76	99	59	71	94	48	57	75
23	25	46	32	74	88	115	69	83	108	55	66	86
23	25	46	25	95	112	147	89	106	138	71	85	110
23	25	25	12	107	131	168	100	120	156	80	96	125
23	25	32	12	137	163	213	129	153	200	103	122	160
23	25	37	12	158	189	247	149	177	231	119	142	185

Seed treatment may reduce seeding rate by 10%.

SOYBEANS Seeding Rate—3500 Seeds Per Pound **Note: Rates are based on 60 pounds per bushel.**

SPROCKETS				SEEDING RATES (POUNDS PER ACRE)								
				7 1/2" Spacing			8" Spacing			10" Spacing		
A	B	C	D	1/2" Slot	5/8" Slot	3/4" Slot	1/2" Slot	5/8" Slot	3/4" Slot	1/2" Slot	5/8" Slot	3/4" Slot
23	37	12	46	9	11	13	8	10	12	7	8	10
23	32	12	46	10	12	16	9	12	14	8	9	12
23	25	12	46	13	16	20	12	15	19	10	12	15
23	25	12	37	17	20	25	15	19	23	12	14	19
23	37	25	46	19	22	29	18	21	26	14	17	21
23	32	25	46	21	26	32	20	24	31	16	20	24
23	37	32	46	23	29	36	22	26	34	18	21	27
23	32	25	37	26	32	41	24	29	37	20	24	31
23	32	37	46	31	38	48	30	35	45	23	29	36
23	25	32	46	34	42	53	33	40	50	26	32	40
23	25	37	46	40	48	62	37	46	57	30	36	46
23	25	32	37	43	53	66	41	49	62	32	40	50
23	32	46	37	48	59	74	45	55	69	36	44	56
23	25	37	32	57	70	88	54	66	83	44	53	66
23	25	46	37	61	75	95	58	70	89	46	56	72
23	25	46	32	72	87	110	67	81	103	54	64	83
23	25	46	25	91	111	141	85	104	132	68	84	106
23	25	25	12	103	126	159	97	119	150	78	95	119
23	25	32	12	133	162	204	124	152	181	99	121	153
23	25	37	12	153	187	235	144	175	221	115	140	177

Seed treatment may reduce seeding rate by 10%.

SUNFLOWERS Seeding Rate **Note: Rates are based on 34 pounds per bushel.**

SPROCKETS				SEEDING RATES (POUNDS PER ACRE)								
				7 1/2" Spacing			8" Spacing			10" Spacing		
				1/2"	5/8"	3/4"	1/2"	5/8"	3/4"	1/2"	5/8"	3/4"
A	B	C	D	Slot	Slot	Slot	Slot	Slot	Slot	Slot	Slot	Slot
14	46	12	46	3	4	5	3	4	5	2	3	4
14	37	12	46	4	5	6	4	5	6	3	4	5
14	32	12	46	5	6	7	4.5	5.5	7	3.5	4.5	5.5
14	25	12	46	6	7	9	5	7	8	4	6	7
23	37	12	46	6.5	8	10	6	8	9	5	6.5	7.5
23	32	12	46	7	10	11	7	9	11	5.5	7	9
23	25	12	46	10	12	14	9	11	14	7	9	11
23	25	12	37	12	15	18	11	14	17	9	11	14
23	37	25	46	13	18	21	12	16	20	10	13	16
23	32	25	46	15	20	24	14	19	23	11	15	18
23	37	32	46	17	22	26	16	21	25	13	17	20
23	32	25	37	19	25	30	18	23	28	14	19	22
23	32	37	46	22	30	36	21	28	33	17	22	27
23	25	32	46	25	33	39	23	31	37	19	24	30
23	25	37	46	29	38	46	27	35	43	22	28	34
23	25	32	37	31	41	49	29	38	46	23	30	37
23	32	46	37	34	46	55	33	43	52	26	34	41
23	25	37	32	42	54	66	39	51	61	31	41	49
23	25	46	37	45	58	70	42	55	66	33	44	53
23	25	46	32	51	67	82	48	63	76	39	51	61

WHEAT Seeding Rate—12000 Seeds Per Pound **Note: Rates are based on 60 pounds per bushel.**

SPROCKETS				SEEDING RATES (POUNDS PER ACRE)								
				7 1/2" Spacing			8" Spacing			10" Spacing		
				1/2"	5/8"	3/4"	1/2"	5/8"	3/4"	1/2"	5/8"	3/4"
A	B	C	D	Slot	Slot	Slot	Slot	Slot	Slot	Slot	Slot	Slot
23	37	12	46	14	16	20	13	15	18	11	12	15
23	32	12	46	16	19	23	15	18	21	12	14	17
23	25	12	46	21	24	29	20	23	27	16	18	22
23	25	12	37	26	30	36	24	28	34	20	23	27
23	37	25	46	29	34	41	27	32	38	22	25	31
23	32	25	46	34	39	47	32	37	43	25	30	35
23	37	32	46	37	44	52	35	41	49	28	33	39
23	32	25	37	42	49	59	40	46	55	32	37	43
23	32	37	46	50	58	70	47	55	64	38	44	52
23	25	32	46	55	64	77	52	61	71	42	48	57
23	25	37	46	64	75	88	60	70	83	48	56	67
23	25	32	37	69	80	95	65	75	90	52	60	71
23	32	46	37	77	90	108	73	84	101	58	68	80
23	25	37	32	92	107	127	86	101	120	69	80	95
23	25	46	37	99	115	137	93	108	129	74	86	104
23	25	46	32	115	133	158	107	125	148	86	100	119
23	25	46	25	147	171	203	137	160	190	110	128	153
23	25	25	12	166	193	230	156	181	216	125	145	172
23	25	32	12	212	247	294	199	232	276	159	185	214
23	25	37	12	246	286	340	230	268	319	184	214	255

Seed treatment may reduce seeding rate by 10%.

WHEAT Seeding Rate—14000 Seeds Per Pound **Note: Rates are based on 60 pounds per bushel.**

SPROCKETS				SEEDING RATES (POUNDS PER ACRE)								
				7 1/2" Spacing			8" Spacing			10" Spacing		
A	B	C	D	1/2" Slot	5/8" Slot	3/4" Slot	1/2" Slot	5/8" Slot	3/4" Slot	1/2" Slot	5/8" Slot	3/4" Slot
23	37	12	46	15	17	20	14	16	19	11	13	15
23	32	12	46	17	20	24	16	19	22	13	15	18
23	25	12	46	22	25	30	21	24	28	16	19	23
23	25	12	37	27	32	38	26	29	35	20	24	28
23	37	25	46	31	36	42	29	34	40	23	27	32
23	32	25	46	50	41	49	34	39	46	27	31	37
23	37	32	46	39	46	55	37	43	51	30	34	41
23	32	25	37	44	51	61	42	48	57	33	38	46
23	32	37	46	53	61	73	49	57	69	40	46	55
23	25	32	46	59	68	81	55	63	76	44	50	61
23	25	37	46	67	78	93	63	73	87	51	59	70
23	25	32	37	73	84	100	68	78	94	55	63	75
23	32	46	37	81	94	112	76	88	105	62	71	84
23	25	37	32	97	112	134	91	105	126	73	84	101
23	25	46	37	105	120	144	98	113	134	78	91	108
23	25	46	32	120	140	167	113	130	156	91	105	125
23	25	46	25	154	180	213	144	168	200	116	134	160
23	25	25	12	175	202	241	164	189	227	132	151	181
23	25	32	12	224	259	309	210	242	290	168	195	231
23	25	37	12	259	300	357	242	280	335	195	224	267

Seed treatment may reduce seeding rate by 10%.

WHEAT Seeding Rate—16000 Seeds Per Pound **Note: Rates are based on 60 pounds per bushel.**

SPROCKETS				SEEDING RATES (POUNDS PER ACRE)								
				7 1/2" Spacing			8" Spacing			10" Spacing		
A	B	C	D	1/2" Slot	5/8" Slot	3/4" Slot	1/2" Slot	5/8" Slot	3/4" Slot	1/2" Slot	5/8" Slot	3/4" Slot
23	37	12	46	15	18	21	14	17	20	12	13	16
23	32	12	46	18	20	24	17	19	22	13	15	18
23	25	12	46	23	26	31	21	24	29	17	20	24
23	25	12	37	28	32	39	26	30	36	21	24	29
23	37	25	46	32	36	44	30	34	41	24	27	33
23	32	25	46	37	42	50	34	40	48	28	32	38
23	37	32	46	41	47	56	38	44	53	31	35	42
23	32	25	37	46	53	63	43	49	59	34	40	48
23	32	37	46	55	63	76	51	59	70	41	47	56
23	25	32	46	60	70	83	56	65	78	45	52	62
23	25	37	46	70	80	96	65	76	90	52	60	71
23	25	32	37	76	86	104	70	81	97	56	65	77
23	32	46	37	84	97	116	78	91	109	63	73	87
23	25	37	32	101	115	138	94	108	129	75	85	104
23	25	46	37	108	125	148	101	116	139	81	93	111
23	25	46	32	125	143	171	116	134	161	94	108	129
23	25	46	25	160	183	220	150	172	206	119	137	165
23	25	25	12	181	207	248	169	195	232	136	155	186
23	25	32	12	231	266	318	217	249	298	174	200	238
23	25	37	12	267	308	368	251	288	344	200	231	276

Seed treatment may reduce seeding rate by 10%.

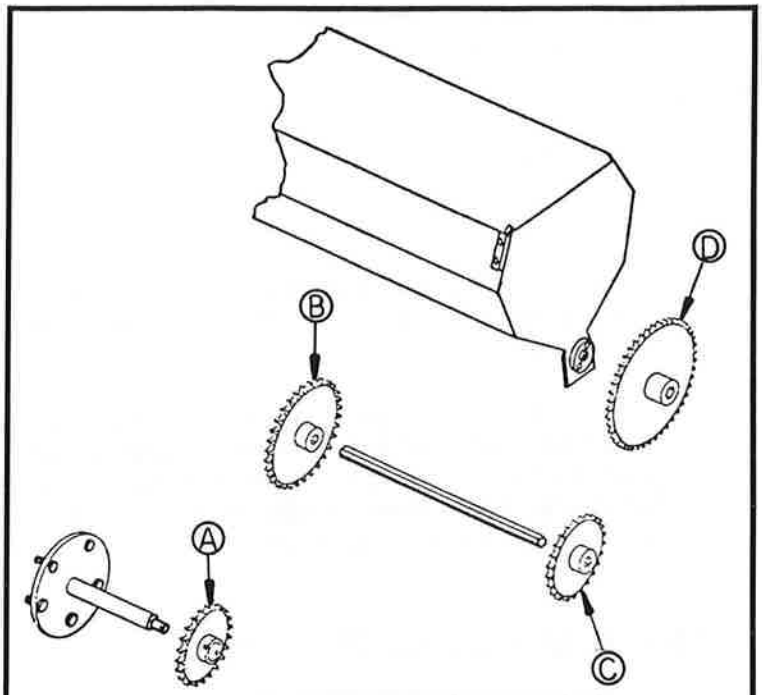

A - B Wheel to Countershaft
C - D Countershaft to Legume Box

FIGURE 1-8

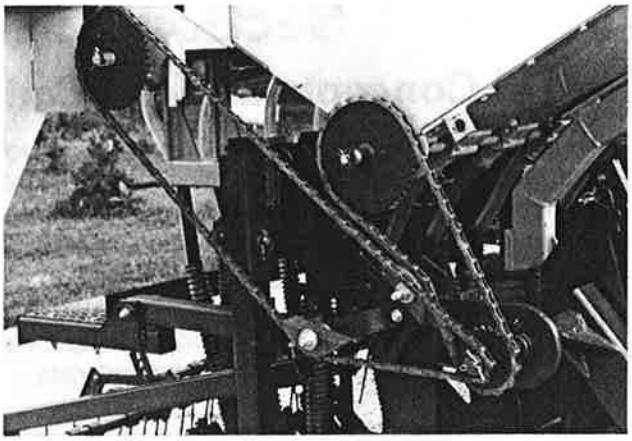

FIGURE 1-9

CrustBuster Mounted Legume Seeder

ALFALFA
RED CLOVER
SWEET CLOVER

Note: Rates are based on 60 pounds per bushel.

SPROCKETS				SEEDING RATES (POUNDS PER ACRE)								
				7 1/2" Spacing			8" Spacing			10" Spacing		
A	B	C	D	1/8" Slot	1/4" Slot	Slot	1/8" Slot	1/4" Slot	Slot	1/8" Slot	1/4" Slot	Slot
14	46	12	46	3	5.5		3	5		2	4	
14	37	12	46	4	6.5		4	6		3	5	
23	37	12	46	6.5	11		6	10		5	8	
23	37	25	46	13	21		12	21		10	16	
23	37	32	46	17	28		15	26		12	21	
14	32	12	46	5	8		4.5	7		3.5	6	
23	32	13	46	7.5	12		7	11		5.5	9	
23	32	25	46	15	25		14	24		11	19	
23	32	37	46	22	37		21	25		16	28	
14	25	12	46	6	9		6	9		4	7	
23	25	12	46	10	16		9	15		7	12	
23	25	12	37	12	20		11	18		9	15	
23	25	32	46	24	41		23	39		18	31	
23	25	37	46	28	48		26	45		21	36	

Section 2: Caddy/Coulter Unit

No-Till Concepts and the Caddy/Coulter Drill

It is generally understood that no-till methods will reduce erosion and save time in crop production. Other aspects are less defined. The Caddy/Coulter system of no-till requires that more attention is paid to soil condition, residue levels, fertilization techniques and chemical weed control.

The following guidelines are important in successfully attaining the best emergence and subsequent yield.

1. Reduce the level of compaction the previous year with some form of deep tillage, if compaction is a known problem.

2. Bring fertility rates up with treatment application levels and apply lime to correct for low PH levels.

3. Attempt no-till in level soil conditions. If the previous crop was cultivated, it may be necessary to lightly disc to remove ridges or combine tracks. This should be done in the fall if possible. No-till coulters will work better when they are cutting firm soil.

4. If perennial weeds are a known problem, attempt to control them with translocating herbicides before starting a no-till system.

5. DO NOT PLANT when soil conditions are too moist. Further compaction will result and create lingering problems. Soil should crumble easily when made into a ball. The first few years of continuous no-till will often require waiting longer for the right conditions. This will improve with time.

6. Plan ahead. Harvesting equipment should have some method of uniformly spreading crop residues across the width of the header.

7. Speed actually enhances the operation and action of the coulters, providing more loose dirt for the harrow to cover seed. Common speeds will range from six to nine miles per hour, depending on ground and residue conditions. In corn stalks (untouched), often drilling at a slight angle to the row will aid in residue flow through the drill and harrow.

8. The most important requirement in no-till seeding is getting excellent seed to soil contact. Firmly placing the seed in the bottom of the slot with the narrow press wheel will seal in the moisture and create the environment for superior emergence. Mulch over the slot will aid in maintaining the moisture in the seed trench and reduce crusting potential.

9. The depth of the coulter will control the depth of the opener.

10. A spring loaded firming wheel acting independently will stay in the bottom of the slot more effectively than will a rigid mounted press wheel.

11. Avoiding sharp turns when seeding will allow the opener to carry less strain and follow the coulter slot more effectively.

12. The harrow should lightly float over residue and cover the seed trench with mulch. Harrow teeth should be adjusted to avoid plugging or bunching. Tough residue (especially due to early morning moisture or damp conditions) will require more adjusting to meet individual conditions.

Lubrication and Service

Refer to the drawing (Fig. 6-3) on Page 38 for lubrication points and intervals.

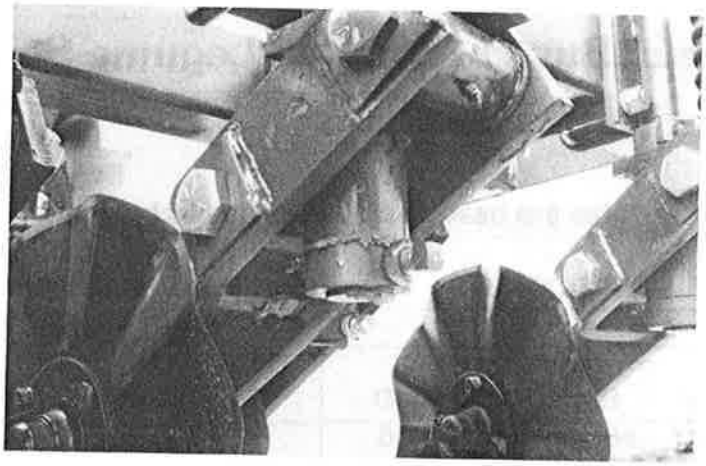

FIGURE 2-1—Coulter pivot points, 3 zerks, daily.

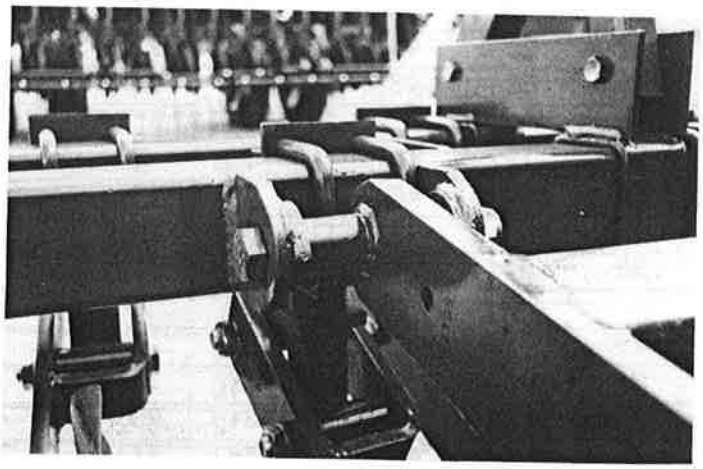

FIGURE 2-2—Forward lift bar pivot, daily.



FIGURE 2-3—Rear lift bar pivot, daily.



FIGURE 2-4—Coulter hub, pack yearly or at 1000 acres of use.

Tire Pressure

Caddy tires are 12:5L x 15" 12 ply implement tires. Inflate to 52#.

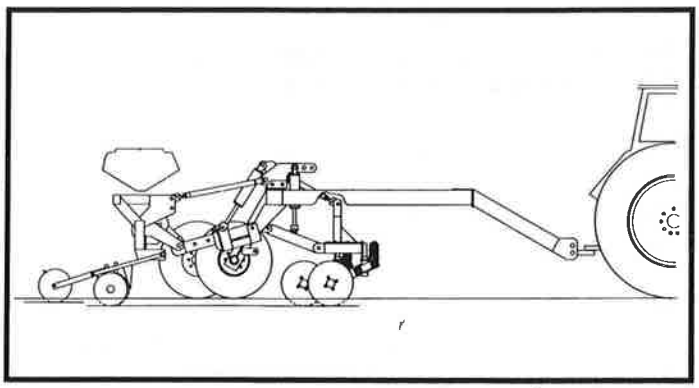

FIGURE 2-5

Adjusting Coulter Depth and Coulter Bar Lockout

THE COULTER DEPTH WILL DETERMINE THE DEPTH OF THE OPENER IN THE NO-TILL CONFIGURATION. Refer to Figure 2-5 indicating the opener depth relative to the coulter depth. "On the go" operation of the coulter bar will require full travel of the coulter bar lockout. Place the stop pin in the upper hole as shown in Figure 2-6. Setting the coulters to the same setting after every turn can be done by placing the stop pin in the second hole from the top, and using the threaded end of the coulter bar lockout for infinite adjustment. To turn the coulter bar lockout, remove the pointer pin, pull the lockout from the upper cylinder mounting and turn up or down to set the depth of the coulters. Replace the coulter bar lockout over the upper cylinder mounting after adjusting. Slow the hydraulic flow rate from the tractor when using "on the go" adjusting. If the caddy will be transported without hydraulics, place the stop pin in the lower hole and release hydraulic pressure before unhooking from the tractor. (Fig. 2-7) DO NOT FORCE HYDRAULIC CYLINDER TO LOWER COULTER BAR WHEN HOOKED UP FOR TRANSPORT.

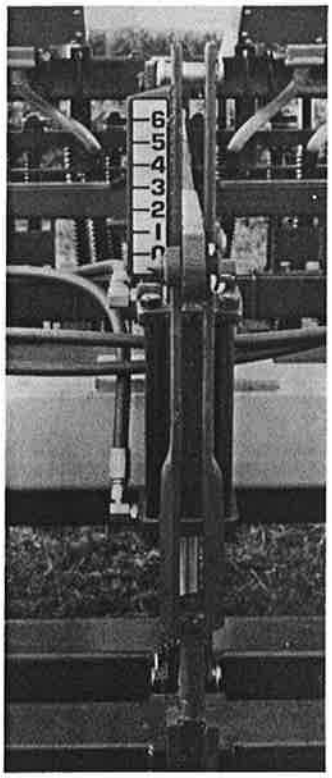

FIGURE 2-6



FIGURE 2-7

Leveling Coulter Bar and Drill

The coulter bar turnbuckles should be adjusted to assure level operation as indicated in Fig. 2-5. If the bar is not level, lead coulters will not operate at the same depth as those following. Be sure the drill is secure on the three point hitch and lock pins in place. Level the drill using the center link from the caddy. Always tighten the jam nuts after making adjustments.

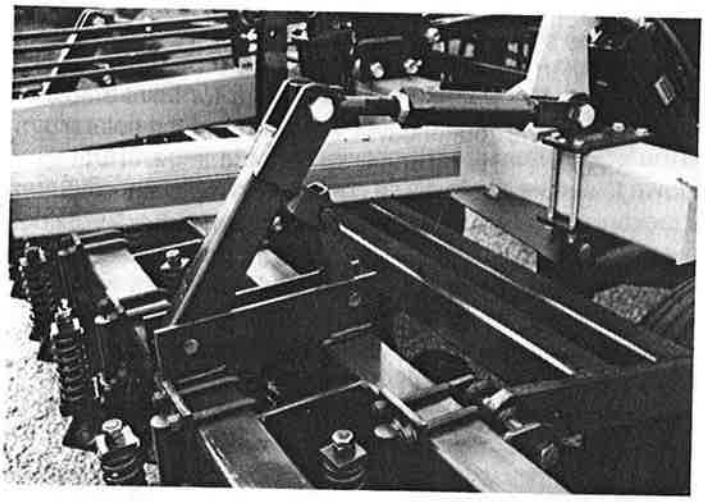

FIGURE 2-8—Coulter bar turnbuckles.

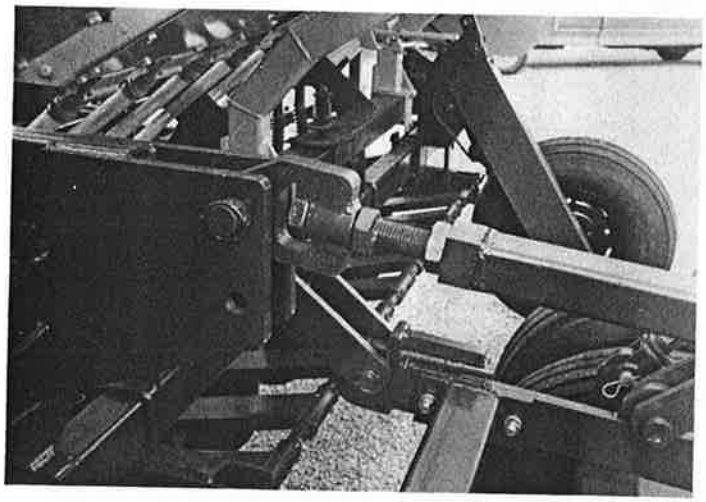

FIGURE 2-9—Caddy center link.

Transport and Storage

REMOVE TRANSPORT STRAPS BEFORE ATTEMPTING TO OPERATE HYDRAULIC CYLINDERS. Remove pin from three point arms and fold straps upward and replace pin through all four straps for field use. Refer to Fig. 2-10.

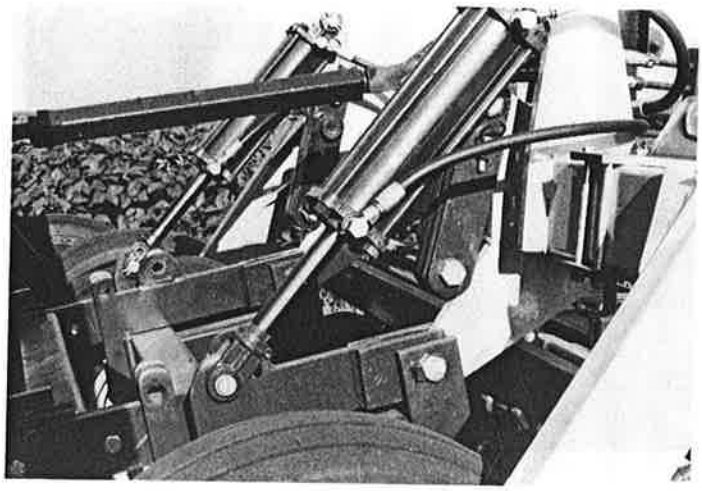

FIGURE 2-10—Field.

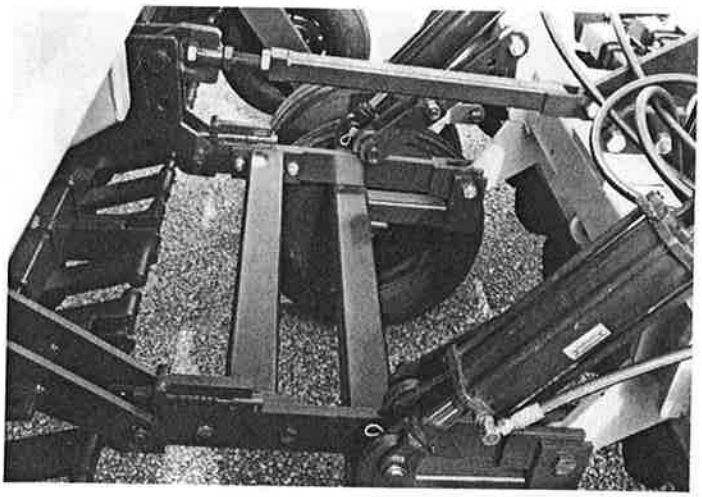

FIGURE 2-11—Road.

Initial Field Settings

The drill drive wheel turnbuckles should be set approximately 22½" pin to pin, as a starting point. Refer to Fig. 2-12. Loosen the lock nuts and adjust accordingly. The basis for setting the turnbuckles should be the length of stem travel on the opener down pressure spring. Maintain 3-4" of spring stem travel for the proper opener operating range. THIS SHOULD BE DETERMINED ONLY AFTER THE DRILL CENTER LINK TURNBUCKLE HAS BEEN SET FOR LEVEL DRILL OPERATION WHEN THE DRILL IS LOWERED TO THE GROUND AND OPERATING. Under most conditions, this will provide adequate down pressure to keep the opener in the bottom of the slot cut by the coulter.

If conditions demand more down pressure, pre-load the down pressure spring by sliding the lower lock collar upward in one inch increments. Each inch will provide another 18# of pressure. DO NOT INCREASE THE DOWN PRESSURE BY SHORTENING THE TURNBUCKLE LENGTH AS THIS WILL REDUCE THE AMOUNT OF OPENER TRAVEL. This could cause excessive damage and unnecessary pressure on the opener in rocky or very hard conditions.

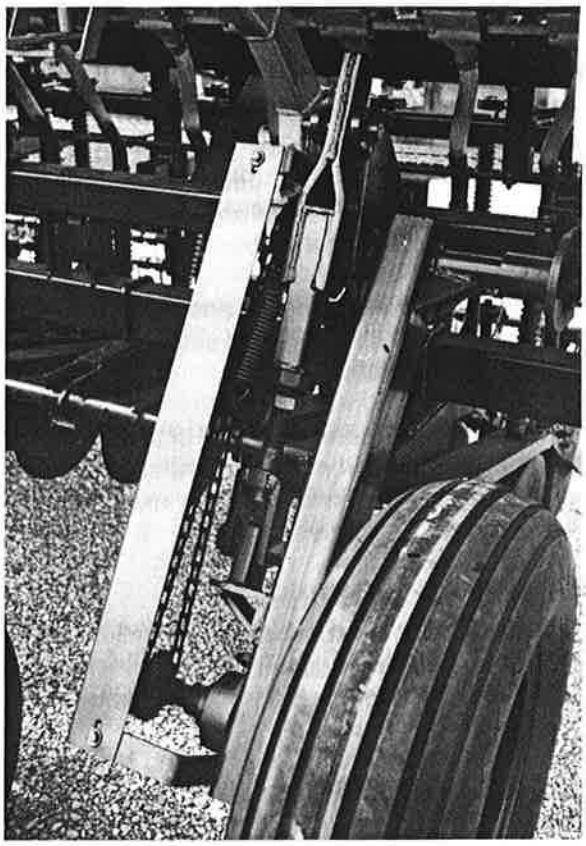

FIGURE 2-12—Drive wheel turnbuckles.

Operate the coulters 1½" to 2" deep to place the seed in firm moist soil. If soil conditions vary significantly across the field, operate the coulter bar manually using the reference depth gauge on the coulter bar lockout. CAUTION: Under "tough" conditions, (i.e. early morning dew, damp soils) the coulters may have a tendency to hairpin residue into the slot below the seed. This is very undesirable and will require that you wait for proper conditions. See Figure 2-13.

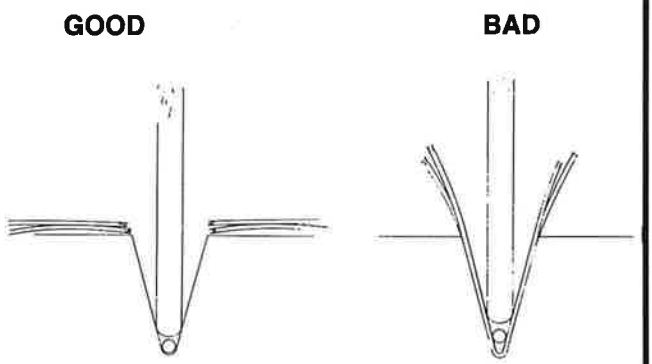

FIGURE 2-13

Firming Wheel Settings

The firming wheel spring tension may be changed by placing the spring adjuster in one of three positions. (Fig. 2-14) Soil conditions will dictate. Under moist conditions and loose soil, the lightest tension may be adequate to assure good seed to soil contact; dry conditions require more pressure against

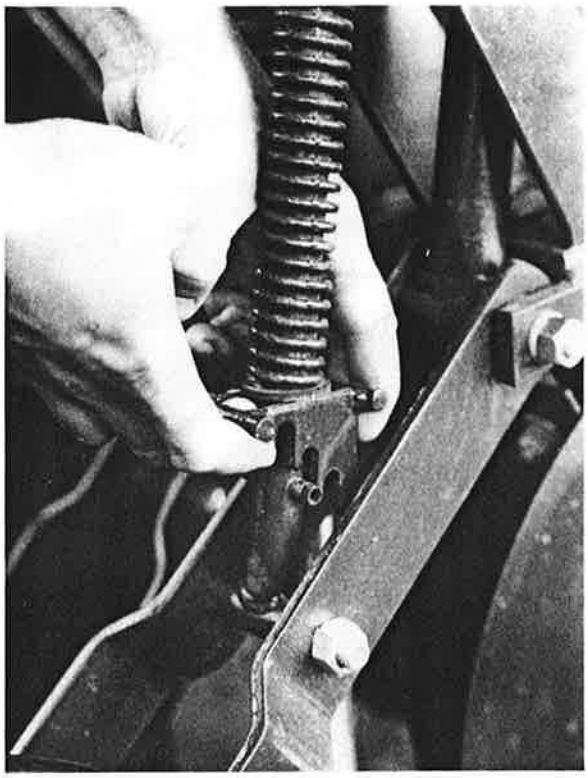

FIGURE 2-14

the seed. Use the upper position as a starting point. Do not use more tension with this spring to compensate for tire track compaction. Pre-load the opener down pressure spring if you are having difficulty keeping the opener in the bottom of the coulter slots behind tires.

Finishing Harrow Use

Adjust the finishing harrow to lightly float over the ground by changing the forward stop bolts. The harrow teeth should be set rearward 30 -45 to assure good cleaning of residue. This will vary depending on the amount of residue, the moisture content of the residue, and the desired amount of covering action. Change the angle of the teeth by loosening the u-bolt mountings and turning the harrow pipe. Early morning versus late afternoon conditions can justify making needed changes. Refer to Fig. 6-4 on Page 39.

Speed of Operation

Wavy coulter action and residue flow through the drill and harrow can be enhanced with higher ground speeds than you may be used to. Depending on ground conditions, 6-9 m.p.h. will usually give good results.

Additional Weight

If ground conditions are hard enough to raise the caddy wheels completely off the ground, add enough weights to the caddy weight bracket to keep light ground pressure on the wheels. If the caddy wheels are nearly off the ground, it may be necessary to readjust the center link turnbuckle to assure level drill operation. The weight bracket will accept most tractor weights. (Fig. 2-15)

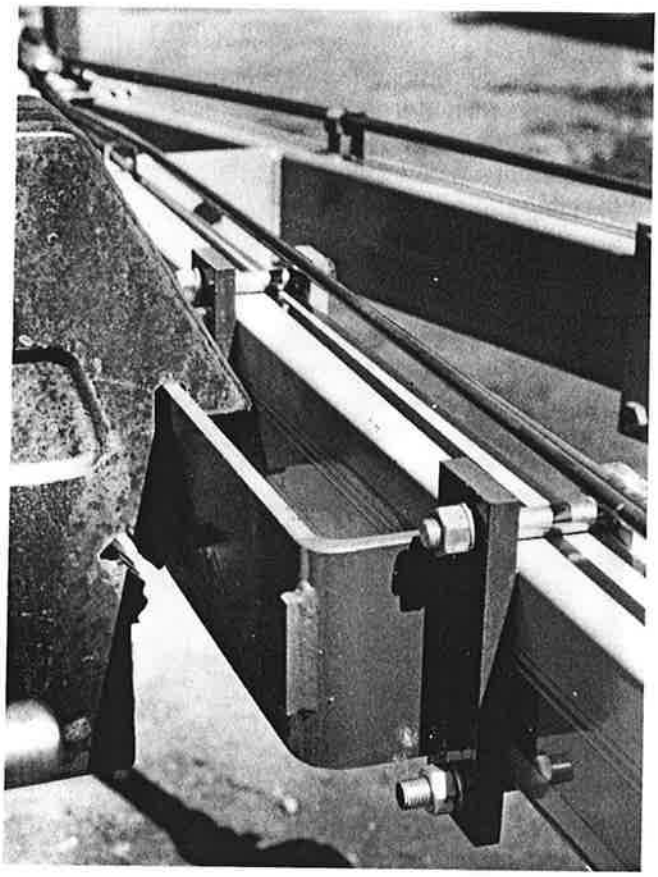

FIGURE 2-15

Special Operating Tips

Corn Stalk Residue (lightly disced in fall) or StaleSeedbed Created by Fall Tillage

Ground conditions may be more nearly level due to tillage and require more length in the drive wheel turnbuckle to maintain proper spring stem travel and good opener contact with the bottom of the coulter slot.

Less harrow action may be desired and can be changed by carrying the harrow a little more and setting more rearward angle on the harrow teeth.

DO NOT use a tillage operation ahead of the caddy/coulter unit. Residue will not cut properly when the coulter is pushing against loose dirt. Hairpinning will be exaggerated and residue flow problems created.

Cornstalk Residue (untouched)

Best results will be obtained when no cultivation is done to the old crop. A level seedbed will assure that each coulter and opener maintains the proper depth that you desire.

In heavy residue, flow through the drill and harrow can be improved by traveling at a slight angle to the old rows. Speed may need to be reduced if cultivation was done to the previous crop.

Drilling Legumes or Grasses in Various Residues

Set the drive wheel turnbuckle to provide minimum spring stem travel and still maintain solid opener contact with the bottom of the coulter slot. Reduce down pressure further, if needed, by taking all down pressure off the opener (lower lock collar). Coulter depth can be difficult to hold at shallow depths (1/4" to 1/2") without hairpinning residue into the slot. Uneven ground will exaggerate this problem. Set the harrow to drag less dirt and residue over the slot when drilling deeper than desired.

Section 3: Caddy/Scratcher Unit

Caddy/Scratcher Concepts

Narrow row planting of soybeans and other crops can be more efficient when done with a combination tool such as the caddy/scratcher. The scratcher will effectively eliminate a separate tillage trip, remove tire tracks unsuitable in solid seeding, provide a secondary chemical incorporation, and offer an alternative use of the caddy and drill combination.

The following guidelines are important in successfully attaining the best emergence and subsequent yield.

1. Remember that the scratcher is not a primary tillage tool. Action from the danish tines will create an excellent seedbed when some tillage has already been performed. When rained out, it can eliminate re-working the soil ahead of the drill.

2. Tillage depth should be held to 3 inches with the danish tines.

3. A significant amount of residue will go through the scratcher due to the vibrating action of the tines.

4. Planting in too moist conditions will result in dirt sticking to the press wheels and distorting depth control.

5. Operating the scratcher in a floating manner will allow it to follow ground contour more effectively.

6. Independent hydraulic control allows the scratcher to be lifted before the drill for crossing grassed waterways, terraces, and ditches.

Lubrication and Service

Refer to Figure 6-5 on page 36 for lubrication points and intervals.

LUBRICATION POINTS
Caddy lift bar pivot points.
Gauge wheel bearings.
Reel bearings.

Tire Inflation

Scratcher gauge wheels require 30# psi.

Depth Adjustment

The scratcher may be operated two ways in the field. The tractor hydraulics should be operated in float when the lockout pin in the lift bar lockout is in the upper hole. This will allow full travel of the lift bar. Depth gauge wheels are then set for proper depth control. If ground terrain is relatively level, and your tractor does not have float position on the hydraulic lever, lower the scratcher to the ground and set the gauge wheels for the approximate desired depth. Place the lockout pin in the second hole from the top and adjust the threaded end of the lockout to allow the push arm mounting to operate in the middle of the float plates. Crossing washes could cause excess pressure on the scratcher if the float range limit is reached.

Section 4: Assembly Instructions—3800 Drill

1. Lift the drill sufficiently to install the drive wheel tires on the drill. A chain attached to the center of the drill will lift and nearly balance the drill.

2. The support stands will now keep the drill from tipping. Do not place them on the upper storage stub until the unit is secured to a tractor or caddy three-point hitch. (See Fig. 4-1)

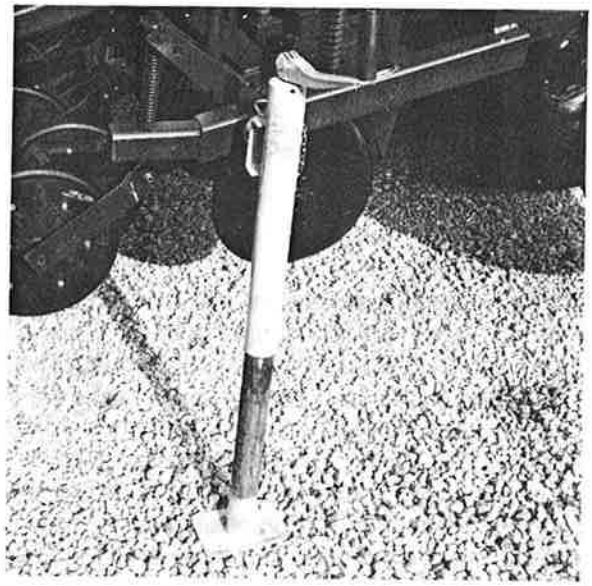

FIGURE 4-1

3. A box of parts is located in the drill box. Remove the flat strap iron with three holes (one centered) and install the acre counter in the center hole. Then install the bracket on either of the drive tires using two ½" x 1 ½"" bolts through the wheel. (See Fig. 4-2)

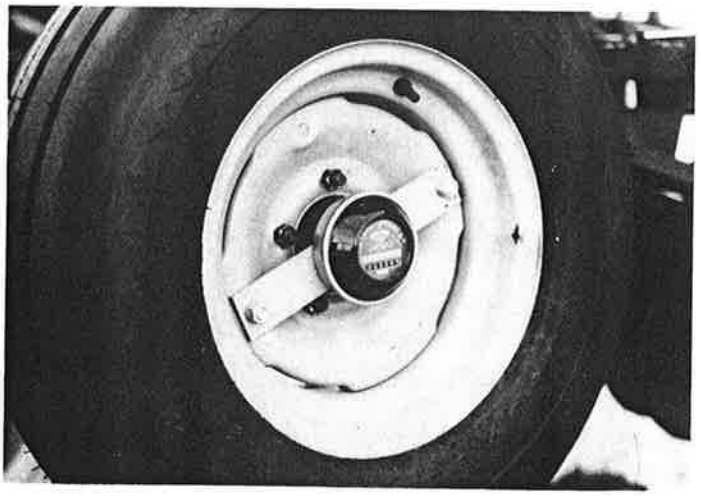

FIGURE 4-2

4. Install the sprocket holders conveniently near the end of the drill frame using two ⅜" x 5" bolts and strap iron. The extra sprockets may then be stored and secured with a lynch pin or hair pin. This is a good time to identify the number of teeth on each sprocket and mark them for later reference. (See Fig. 4-3)

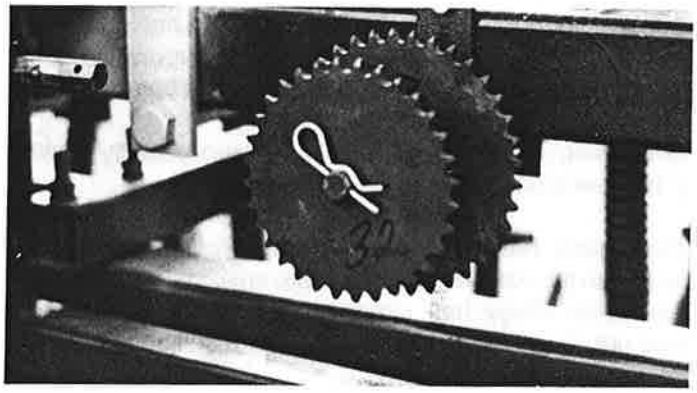

FIGURE 4-3

5. Next install the chain guard end doors on the appropriate ends. On the right hand side (looking from the rear), apply the amber reflector tape to the front edge of the door, then apply the red reflector tape to the left side door front. (See Fig. 4-4)

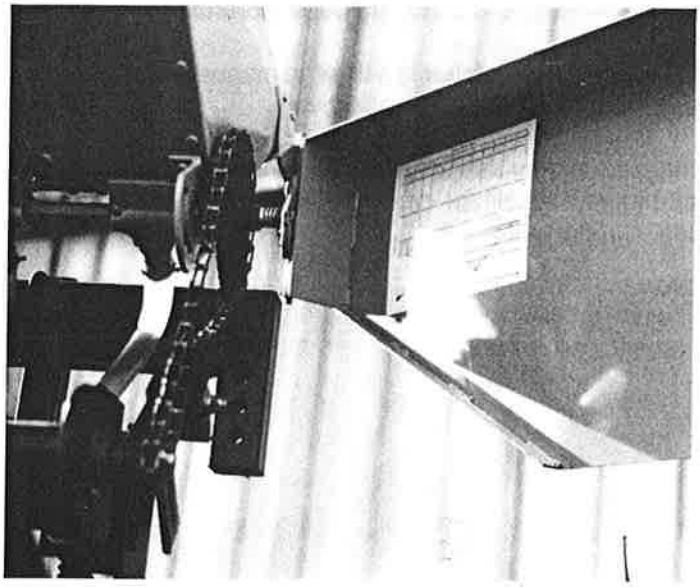

FIGURE 4-4

6. Near the center of the drill, mount the Slow Moving Vehicle Sign bracket to the rear down pressure spring rail, using two ⅜" x 1 ½" carriage bolts. Attach the SMV emblem to the bracket, using two ¼" x ¾" hex bolts. (See Fig. 4-5) When using legume seeder use different bracket provided.

7. If you need to install hydraulic markers, refer to the set-up instructions for them located elsewhere in this manual.

8. Remove the steel hydraulic lines from the rear of the drill for use on the caddy.

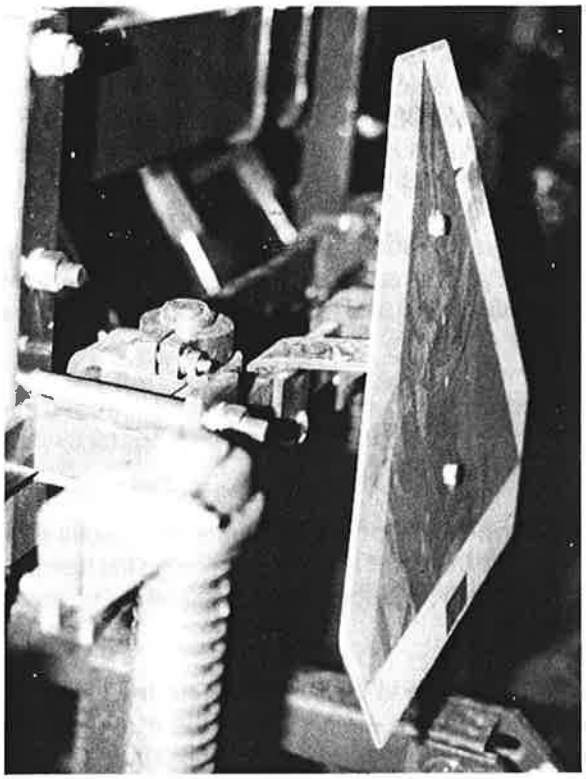

FIGURE 4-5

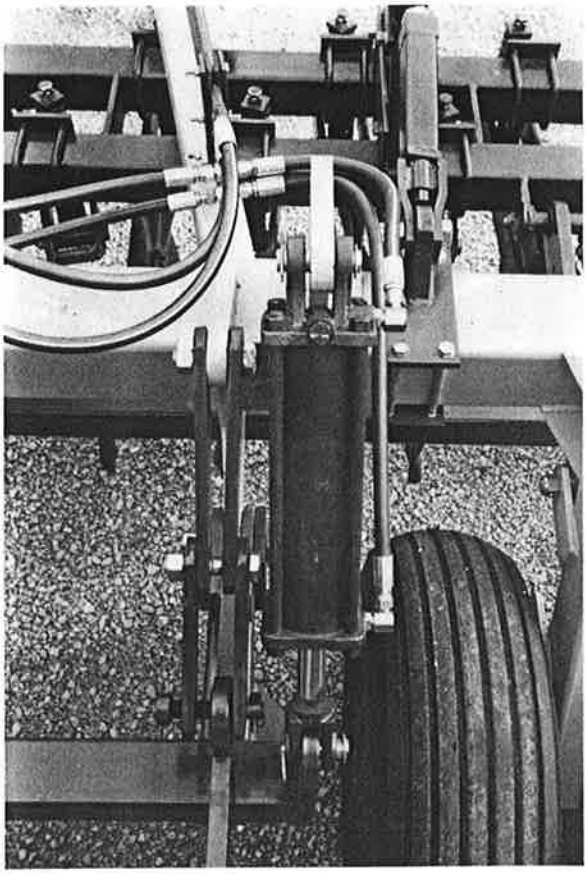

FIGURE 4-6—Right.

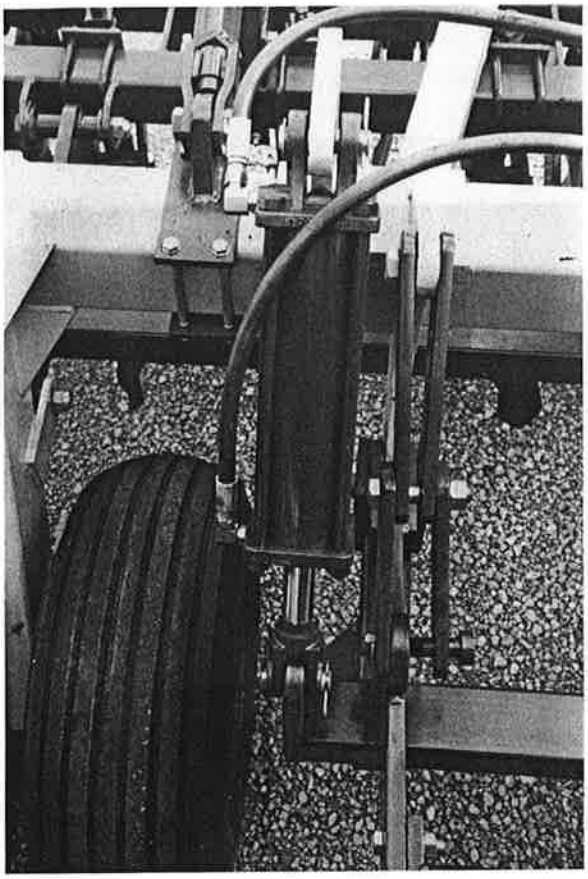

FIGURE 4-7—Left.

Assembly Instructions—Caddy and Coulter Bar

1. Lift the caddy and install the wheel spindles to the frame. Single tires should be mounted on the outside of the caddy frame to enhance stability. Dual wheel options are available. It is recommended that grease or Never-Seez be applied to the spindle. Leave approximately 3/4" gap between the tire and caddy frame. Once you have bolted the wheel to the spindle and confirmed the proper spacing, tighten locking bolts and set screws.

2. Open the Caddy/Coulter Bar hardware box and remove the two 4" x 12" hydraulic cylinders. Install on the 3-point frame with the hydraulic ports facingoutward. Remove plastic plugs to relieve pressure and allow for extending the rams. (See Fig. 4-6 and Fig. 4-7)

3. Install the caddy dual top link bracket using two 1" x 3" bolts and locking nuts. The high end of the bracket will face forward and support the 4" x 8" hydraulic cylinder. (See Fig. 4-8)

4. Hang the coulter bar cylinder so the ram clevis is down and the hose ports are on the right side (from the rear). (See Fig. 4-8)

5. Install elbow fittings in all the cylinders.

6. Remove from the shipping carton, four strap iron brackets and matching rubber strips, eight 5/16" x 2" bolts, and cut tubing spacers. Sandwich two rubber strips between two

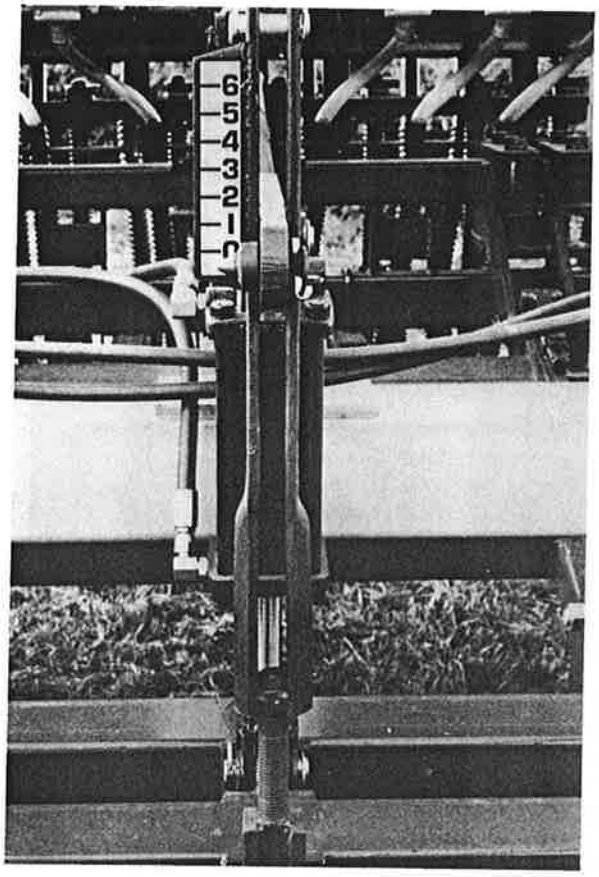

FIGURE 4-8

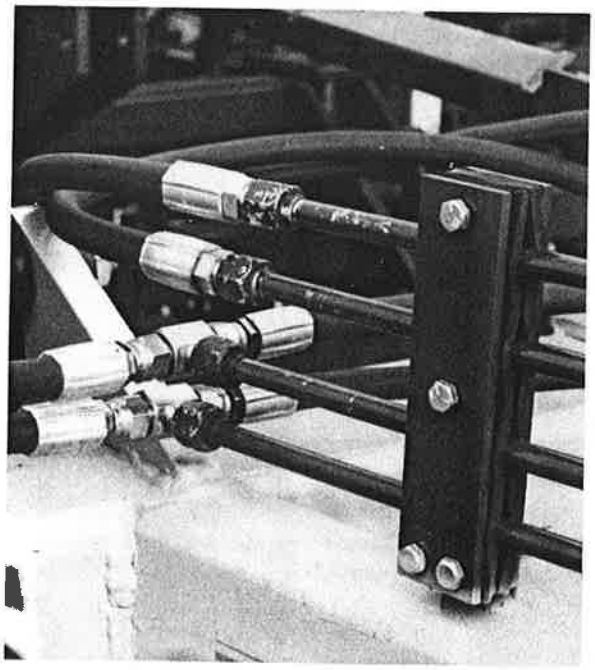

FIGURE 4-9

brackets and mount on the front stub located on the right front caddy frame, using the 5/16" x 2" bolts. Do the same for the rear bracket. Stack all four steel hydraulic lines spaced equally. Draw the bolts up snug to cut spacers into rubber and secure the lines after you have finished plumbing the cylinders. (See Fig. 4-9)

7. Match hoses with required length and install on all cylinders. Left lift cylinder requires the 46" and 54" lines. Right lift cylinder requires the 18" and 24" lines. Coulter bar cylinder uses two 40" lines.

8. Thread tractor hydraulic lines to the steel lines and install the hydraulic couplers. Hang the support stand for the hoses using a 1/2" x 1 1/2" bolt.

9. Hook the hydraulics to the tractor, raise the 3 point slightly and release the transport straps by removing the bottom pin and folding the bottom pieces into the top and re-inserting the pin.

10. Cycle the system to purge all air from the system and assure that all fittings are tight and there are no leaks. CAUTION: Escaping hydraulic oil can penetrate the skin.

11. The coulter lift bar should now be placed under the caddy with the narrow spool mounting to the rear. Lift the bar through the use of a chain and clevis dropped from above the center of the caddy. Install the rear pivot bolts, using 1" x 5" with locknuts. Do not over-tighten the locknuts. Remove the chain and clevis and lift the bar to attach the coulter bar cylinder. Install lockout as shown. (See Fig. 4-8)

12. The coulter bar should now be placed upside down with the coulter mounting pedestals up. Slide each coulter on with the coulter in a trailing position when the coulter bar is turned over. Place the locking ring on with the set screw facing forward and tighten the set screws firmly. After all coulters are installed, very carefully invert the bar, being careful no one is underneath. The bar will tip forward. Lift the bar with a fork truck and put under the caddy as far as possible.

13. Lift the tongue of the caddy and maneuver the caddy over the coulter bar, aligning the mounting brackets as closely as you can. Then lift the bar through the center of the caddy as you did the coulter lift bar and put in the 1" x 7 1/2" pivot bolts.

14. Loosely install the rear parallel arm and attach brackets to the top of the main caddy cross member using four 1/2" x 7" bolts, lockwashers and hex nuts.

15. Install the parallel arm standards, with the vertical arm to the rear using four 1/2" x 5" bolts, lockwashers and hex nuts. Place them on the bar where they will best line up with the rear attach brackets on the main cross member. (See Fig. 4-10)

16. Put together the two 17" turnbuckles, using a locking nut on each. Install them between the two brackets just installed,

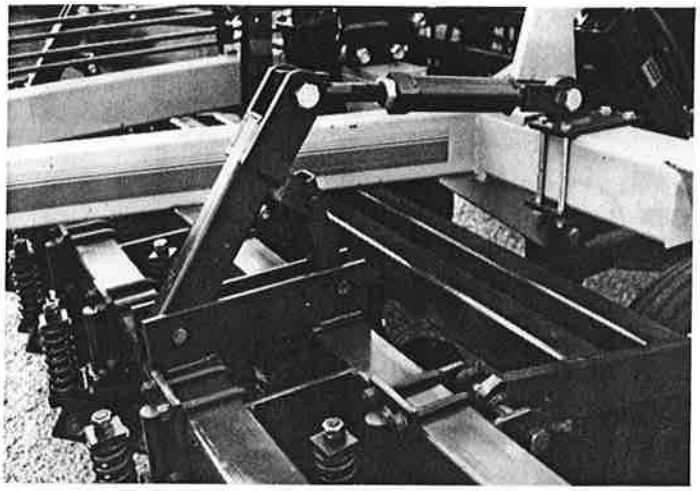

FIGURE 4-10

using 1" x 3" bolts on the rear brackets and 1"x 4" bolts on the front brackets. Do not over-tighten the locking nuts on pivot bolts. Tighten rear brackets when alignment is completed.

17. Put together the 31" center link using a lock nut, and attach to the caddy top center link bracket using a 1" x 3" bolt. The center link will be attached to the drill when it is hooked to the caddy using a 1 1/4" pin with lynch pins.

18. Hook drill to the caddy with a tractor by sliding the 3 point lock pins forward and rotating 1/4 turn to hold until the drill has been hooked up. Be sure lock pins have slid back into place after hook up.

19. Initial set-up should be completed. Check to make sure that the coulter bar is level by using the parallel arm turnbuckles. Level the drill using the center link. The drive wheel turnbuckles should be set approximately 23 1/2 inches pin to pin, on center, for initial set-up. This may need to be changed in actual conditions. The down pressure spring stems should have approximately 3 inches showing above the stem bracket when the drill is in the down position. If not, adjust drive wheel linkages accordingly. More down pressure may be achieved by pre-loading the spring using the lower lock collar. Do not sacrifice opener travel by lowering the drill frame to get more down pressure.

20. Turn the drill seed cup shafts to assure free movement. Light penetrating oil may be applied to rotors. In normal use, powdered graphite at the beginning and end of season will be sufficient to lubricate the rotor and be less likely to gather dust and seed treatment. Loosen the adjusting lever and work back and forth to assure free movement. Place a 1/2" square stock or bolt in the rotor, bring it up snug with the adjusting lever, and verify the slot width gauge indicates proper width. If not, loosen the screw on the gauge and slide to adjust.

Assembly Instructions— Two Bar Tine Harrow

10' and 15' Models

Each harrow section is 5' long. They are each assembled the same and may fit in any particular order across the drill. Each section is hung from two-2" square tubing pull bars you will mount underneath the drill walkboard brackets.

1. On each harrow pull bar, identify the end with two holes drilled through the tube in the opposite directions. The end hole will use an all thread bolt for harrow height adjustment. The second hole will utilize a bolt and locking nut acting as a pivot. Refer to drawing in Section 6.

2. Sort the bolt box into different bolt sizes and nut styles per the packing sheet included in the box.

3. On each harrow pull bar, thread the all thread bolt through the end hole containing the internally welded nut (nut on bottom). Leave approximately 3/4" gap between the bolt head and the tubing.

4. Using a 5/8" regular nut as a jam nut on the outside of the tubing, lock the bolt solid.

5. Using a 5/8" x 4" bolt and locknut, install the harrow pull bar in the clevis underneath the walkboard bracket. Do not overtighten the locknut. Allow free movement for pivot.

6. With a 1/2" x 3 1/2" bolt, lock washer and nut, install the "u" cross bars in the clevis at the end of each pull bar. Do not tighten until installation of harrow sections is complete.

7. Hang each harrow section on the "u" bars with 5/8" x 3" and 5/8" x 4" bolt, lock washer and nuts as depicted. Attach front multi-hole plate so harrow section is level. Tighten.

8. Slide the "u" bar left or right to accommodate harrow section separation. When you are sure the harrow sections will not interfere with each other, tighten "u" bar clevis bolts.

9. Loosen u-bolts in the harrow adjustment plate and rotate the tines rearward approximately 30 degrees. Snug u-bolts after setting tines.

Assembly Instructions— 15' Scratcher

1. Place the scratcher frame under the caddy with the push arm mounting brackets to the rear.

2. Slide the gauge wheel assemblies into the tubes provided on the scratcher frame and mount the wheels to the hubs, securing with 5/8" x 1 1/2" set screws and jam nuts.

3. Place the push arms in the lower caddy mounting lugs using 1" x 3" pins and lynch pins. Attach to the scratcher frame.

4. Bolt the lift bar extended arm to the lift bar of the caddy using 3/4" x 1 1/2" H.H.C.S. bolt and lockwashers and nuts. Attach the float plates to the lift arms and scratcher mounting as shown in Figure 4-11.

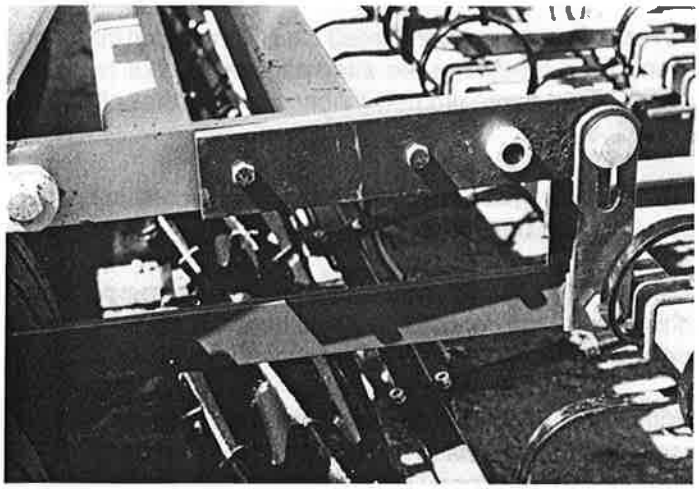

FIGURE 4-11

5. Mount the scratcher vertical masts to the scratcher frame so as to align with the caddy mast lug brackets. Use 1/2" x 3 1/2" H.H.C.S. bolts, lockwasher and nuts provided. Assemble the turnbuckle, first threading the lock nut onto the threaded eye. Install the turnbuckles on the mast lug bracket with a 1" x 3" H.H.C.S. and locking nuts and then on the vertical scratcher mast with 1" x 4" H.H.C.S. and locking nuts. Adjust the turnbuckles to level the scratcher frame. (See Fig. 4-12)

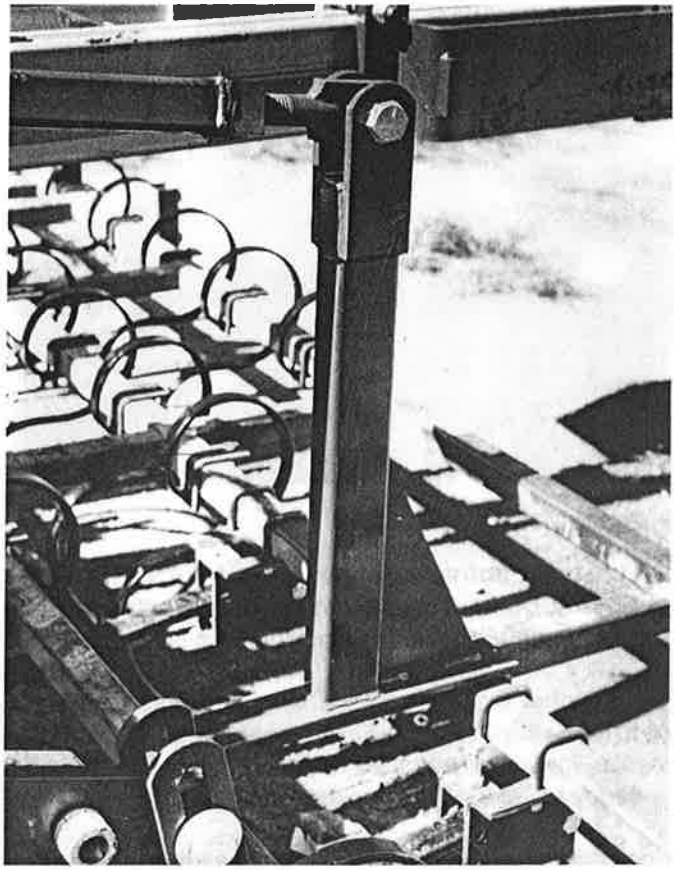

FIGURE 4-12

6. Raise the scratcher with the lift bar cylinder and mount the Danish tines according to the locations pictured in Figure 4-13. Use 1/2" x 3 1/2" H.H.C.S. bolts, lockwashers and nuts provided.

7. Bolt the mounting brackets for the reel spring to the middle bar of the scratcher frame as shown in Figure 4-15.

8. Place the reel leaf spring in the mounting brackets as shown in Figure 6-5.

9. Bolt the reel section to the spring, being sure to mount the flat portion of the frame to the underside of the spring using u-bolts provided. (See Fig. 4-16)

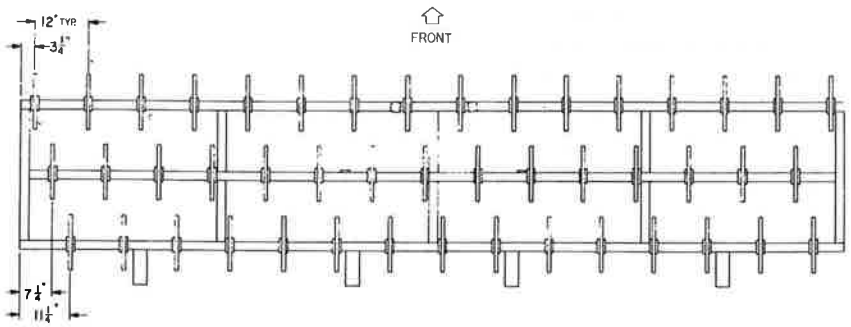

FIGURE 4-13

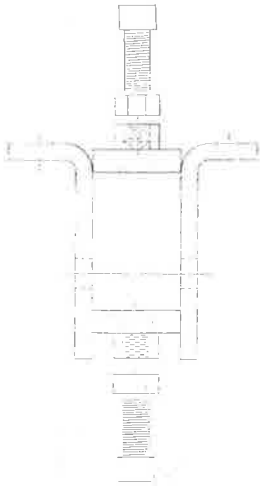

FIGURE 4-15

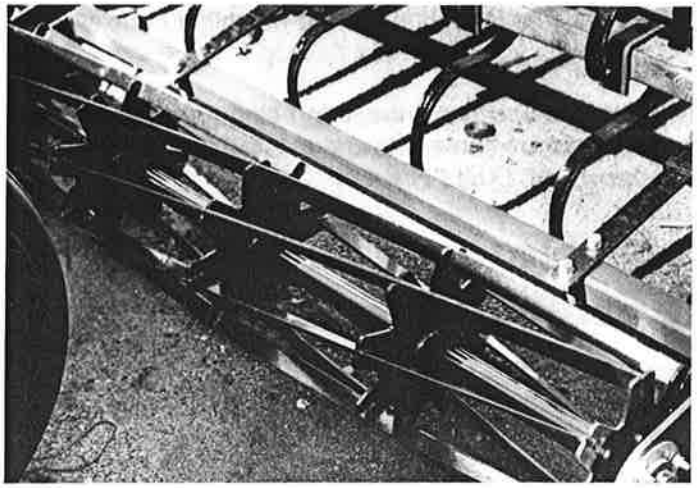

FIGURE 4-16

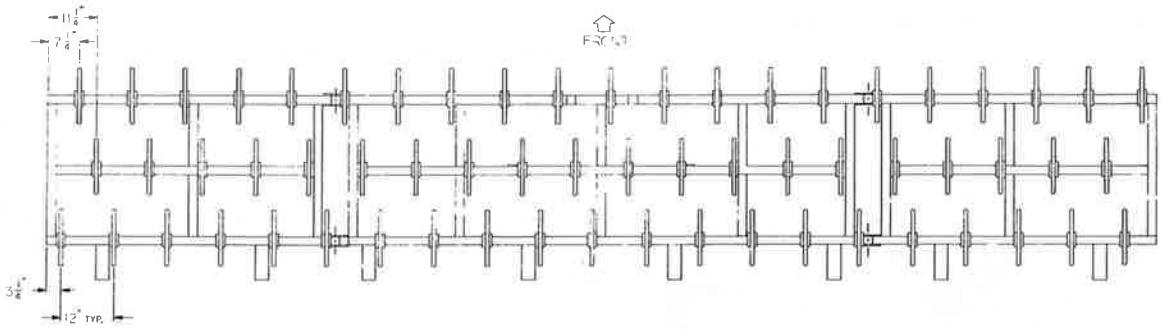

FIGURE 4-14

Assembly Instructions— 20' Scratcher

1. Place the scratcher frame under the caddy with the push arm mounting brackets to the rear.

2. Mount the wing rests to the middle tube of the center frame approximately 35" from the center of the frame to the center of the u-bolts. Secure using 5/8" x 3 1/2"" H.H.C.S., lockwashers and nuts. Attach the wings to the scratcher mainframe using hex bolts at the pivot points. WARNING: WINGS ARE HEAVY. WHEN FOLDING AND UNFOLDING, EXTREME CAUTION SHOULD BE USED TO AVOID PERSONAL INJURY FROM THE TEETH ON THE DANISH TINES.

3. Slide the gauge wheel assemblies into the tubes provided on the scratcher frame and mount the wheels to the hubs, securing with 5/8" x 1 1/2" set screws and jam nuts.

4. Place the push arms in the lower caddy mounting lugs using 1" x 3" pins and lynch pins. Attach to the scratcher frame.

5. Bolt the lift bar extended arm to the lift bar of the caddy using 3/4" x 1 1/2"" H.H.C.S. bolt and lockwashers and nuts. Attach the float plates to the lift arms and scratcher mounting as shown in Figure 4-11.

6. Mount the scratcher vertical masts to the scratcher frame so as to align with the caddy mast lug brackets. Use 1/2" x 3 1/2" H.H.C.S. bolts, lockwasher and nuts provided. Assemble the turnbuckle, first threading the lock nut onto the threaded eye. Install the turnbuckles on the mast lug bracket with a 1" x 3" H.H.C.S. and locking nuts and then on the vertical scratcher mast with 1" x 4" H.H.C.S. and locking nuts. Adjust the turnbuckles to level the scratcher frame. (See Fig. 4-12)

7. Raise the scratcher with the lift bar cylinder and mount the Danish tines according to the locations pictured in Figure 4-14. Use 1/2" x 3 1/2" H.H.C.S. bolts, lockwashers and nuts provided.

8. Bolt the mounting brackets for the reel spring to the middle bar of the scratcher frame as shown in Figure 4-15.

9. Place the reel leaf spring in the mounting brackets as shown.

10. Bolt the reel section to the spring, being sure to mount the flat portion of the frame to the underside of the spring using u-bolts provided. (See Fig. 4-16)

Assembly Instructions— Hydraulic Markers

15' and 20' Models

1. Sort items in the marker hardware box to ensure identification.

2. Install marker mounting bracket (#9) to both sides of the mainframe of drill using bolts and straps provided. (See drawings in Section 6)

3. Attach marker base mount to the marker mounting bracket as depicted using 4" U-bolts. Allow 1" clearance minimum between marker base mount and box end chain guard door. (See Fig. 4-17)

4. Screw hydraulic marker cylinder bracket onto the ram end of the 3" x 20" hydraulic cylinder. Tighten set screw onto cylinder ram. Attach base end of cylinder to the marker base mount with cylinder pins provided.

5. Remove cylinder port plugs.

6. Install marker base arm to marker base mount with the base mount bracket pin and secure pin with a 1/2" x 2 1/2" bolt and lock nut.

7. Attach middle section of hydraulic marker to the marker base arm with another bracket pin and secure with a 1/2" x 2 1/2" bolt and lock nut.

8. Extend hydraulic cylinder ram outward to align cylinder bracket with slotted portion of marker and connect with cylinder bracket pin. Use a 1" flat washer on the outside of slotted area when installing pin. Secure bracket pin with 5/16" x 1 1/2" roll pin provided. Attach two springs from cylinder bracket to cross rod on middle section of marker. These must be installed for marker to work properly. (See Fig. 4-18)

9. Support outer end of center section of marker and install the adjustable marker arm. Measure from last drill run to marker disc and lock marker arm with a 5/8" x 1 1/2" set screw and jam nut. (See Fig. 4-19)

10. Install marker blade assembly as depicted. Angle setting will be dependent on field conditions and amount of furrow desired.

11. Install hydraulic elbow fittings in cylinder ports. Top fitting should point downward, bottom fitting should point rearward.

12. Refer to hydraulic schematics for plumbing the marker system. If the marker is to be connected to the lift system, you will need to plumb differently than if the markers are to be operated separately. Either way, you will install the marker sequence valve. Route hydraulic lines through hose carriers. Allow enough slack at each marker cylinder to avoid stretching hydraulic lines. **When testing for leaks, be careful! Escaping hydraulic fluid can penetrate skin. Use cardboard or other means to test for leaks!**

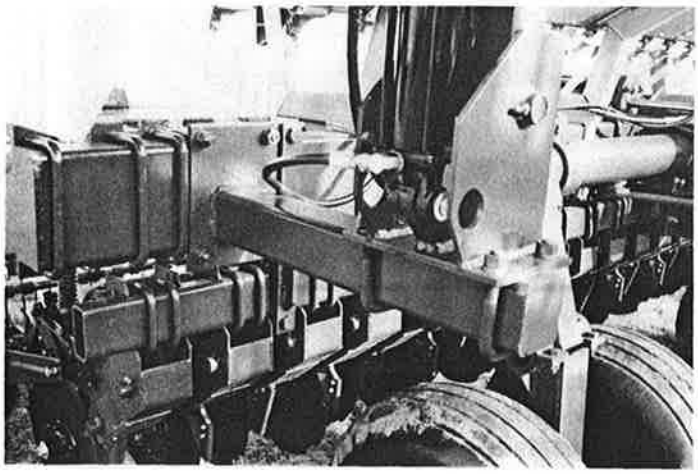

FIGURE 4-17

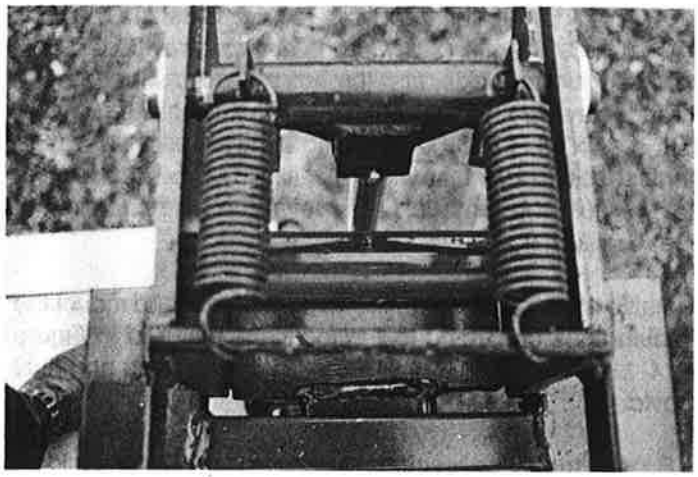

FIGURE 4-18



FIGURE 4-19

Section 5: No-Till to Conventional Conversion Procedure

The 3800 Caddy features the flexibility to use entirely different methods of drilling a crop. By utilizing a coulter bar, single one inch spring loaded firming wheel, and a finishing harrow, no-till operations are done properly. Converting the caddy and drill for conventional uses, by exchanging certain components, will offer the owner the capability to meet both needs. The coulter bar is replaced with the scratcher/reel unit; the one inch firming wheel is changed to a 3" depth gauge wheel, and the finishing harrow is removed.

The following steps are to assist you in making this change over as fast as possible.

1. Raise the coulter bar as high as the lift bar will raise it. Mount the end wheel carrier on either end of the coulter bar using two 3/4" x 1 1/2" bolts, lockwashers and nuts. On the opposite end, mount the tongue bracket using similar bolts. The tongue may then be slid into the mounting tube and secured with a 1" x 4" bolt, lockwasher and nut. (See Fig. 5-1 and Fig. 5-2)

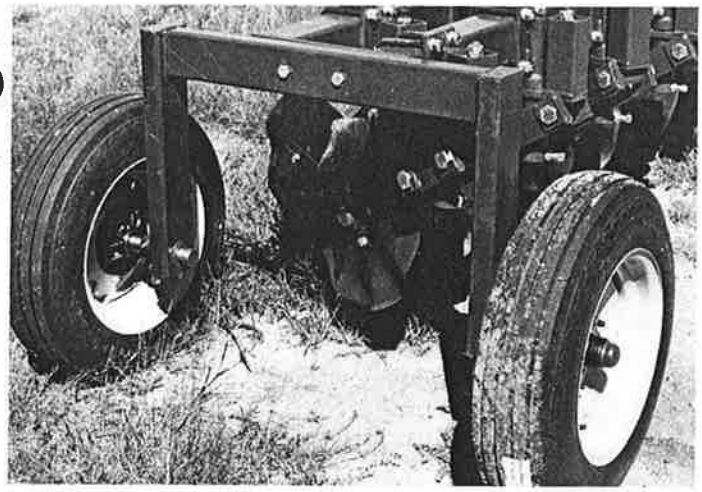

FIGURE 5-1

2. Lower the coulter bar to the ground till it is supported by the end wheel carrier and the hitch jack. Release hydraulic pressure on the coulter bar lift cylinder by shutting off the tractor and moving the hydraulic lever back and forth.

3. Release the lift bar from the coulter bar, and remove the turnbuckles from the coulter bar masts. Fold the masts horizontal by removing the 5/8" locking pin.

4. Back the caddy away from the coulter bar a few inches, and pull the coulter bar from under the caddy.

5. With the folding masts horizontal on the scratcher unit, and the tongue taken from the coulter bar and placed in the

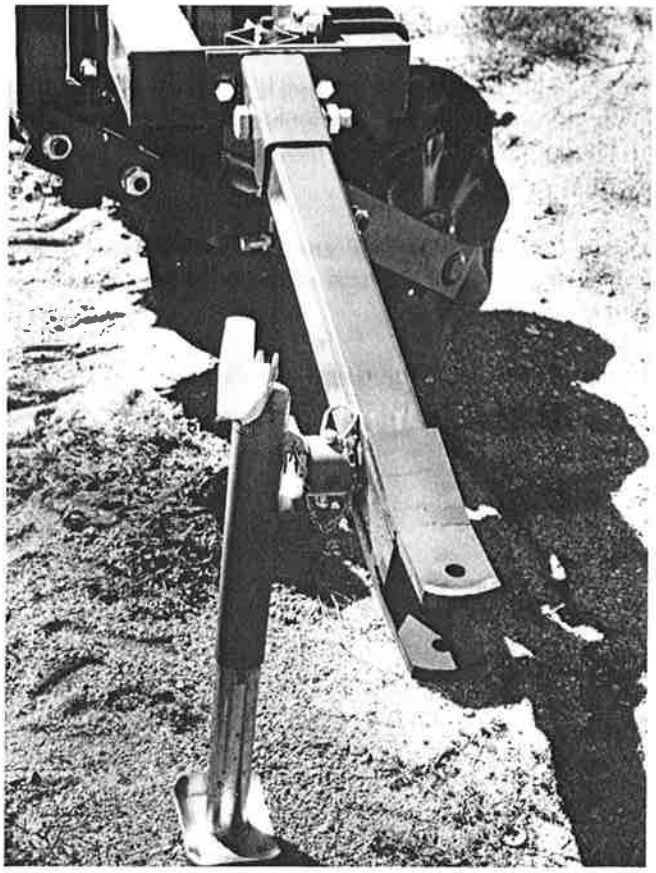

FIGURE 5-2

scratcher unit, back the scratcher under the caddy and position in front of the lift bar in line with the mounting brackets.

6. Hook up the push bars from the caddy lower clevis mounting to the scratcher frame. Bolt the lift bar extended arms to the lift bar, and bolt to the float plates.

7. Raise the folding masts on the scratcher and secure with the 5/8" pin. Replace the turnbuckles and level the scratcher unit before tightening the locknut.

8. Raise the scratcher as high as the lift bar will raise it. Loosen the depth gauging wheels and remove them from the mounting tubing. Rotate 90° forward and slide back up into the tube and secure with the set screw until you are ready to set them for the desired depth.

9. Remove the tine harrow from the main support tubes and set aside.

10. Loosen the set screw on the one inch wheel bearing shafts. Loosen one side of the quadrant mounting plate. Remove the 1/2" x 4" bolt holding the press wheel straps

together. The one inch wheel may now be removed. Remove the bottom end of the spring assembly. Remove the cotter keys securing the top end of the spring assembly and replace the entire assembly with the depth quadrant.

11. Mount the 3" x 13" press wheel using the 5½" x ⅝" bolt and locknut and appropriate bushings.

12. Replace the lower quadrant bolt holding the press wheel straps together and tighten the locknut to allow free movement. Re-tighten the quadrant mounting plate to complete press wheel change over.

13. Lower scratcher to level ground and set the approximate operating depth with the gauge wheels. Be sure the lift bar lockout is set accordingly.

14. Remove the hitch tongue and replace on the coulter bar.

Section 6: Scale Drawings & Parts Listings

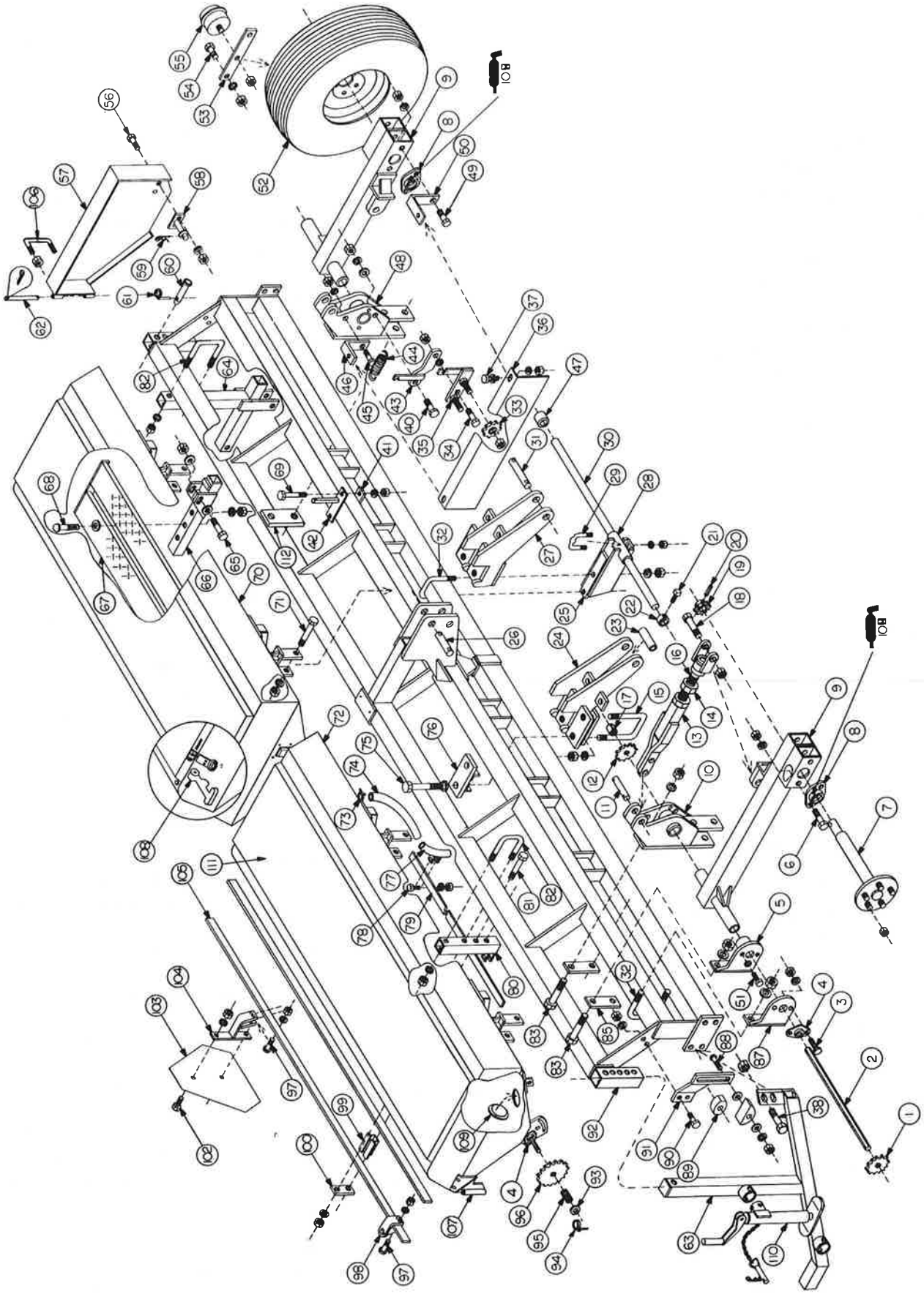

FIGURE 6-1

3800 Drill Parts List
Figure 6-1

Item No.	Part No.	Description
1	430462	25 Tooth 2040 Sprocket
2	302802	Drive Shaft (31 1/8") (15')
	302588	Drive Shaft (50 3/4") (20')
3	331835	1/4" x 1" H.H.C.S. w/Lockwasher & Hex Nut
4	400804	5/8" Hex Bearing
5	925511	Wheel Bearing Assembly
6	01147800	1/2" x 1 1/2" H.H.C.S. w/Lockwasher & Hex Nut
7	922088	Drill Axle
8	400697	Flange Bearing Assembly
9	922096	Wheel Arm
10	937003	Wheel Bracket - Right
11	303131	Wheel Adjustment Pin
12	430454	32 Tooth 2040 Sprocket
13	936906	Adjustment Screw Swivel Bracket
14	331264	1 1/4" Jam Nut
15	334144	3/4" x 3" x 7 1/4" U-Bolt w/Lockwasher & Hex Nut
16	936914	Adjustment Link Swivel Bracket
17	140665	Shaft Splicer
18	334870	1" x 4" H.H.C.S. w/Locknut
19	430504	23 Tooth Drive Sprocket
20	330662	5/16" x 1 3/4" Roll Pin
21	334748	5/16" x 1/2" Square Head Set Screw
22	144444	Lock Collar
23	144220	Lower Hitch Bushing
24	926352	Lower Hitch - Right
25	944157	Shaft Hanger Bracket
26	302927	Upper Hitch Pin
27	926345	Lower Hitch - Left
28	147397	3 1/4" Spacer Bushing (15' x 7 1/2" - 20' x 7 1/2")
	144493	3 3/4" Spacer Bushing (15' x 8" - 20' x 8")
	144501	5 3/4" Spacer Bushing (15' x 10" - 20' x 10")
29	333906	3/8" Flattened U-Bolt
30	304535	Opener Mounting Shaft (88") (15' x 7 1/2")
	304527	Opener Mounting Shaft (86") (15' x 8" - 15' x 10")
	306605	Opener Mounting Shaft (59") (20' x 7 1/2")
	304469	Opener Mounting Shaft (54") (20' x 8")
	304485	Opener Mounting Shaft (64") (20' x 8")
	304477	Opener Mounting Shaft (56") (20' x 10")
31	302844	Lower Hitch Pin
32	333526	1/2" x 3" x 5 1/2" U-Bolt w/Lockwasher & Hex Nut
33	430603	17 Tooth Idler Sprocket
34	01147800	1/2" x 1 1/2" H.H.C.S. w/Flatwasher & Locknut
35	922229	Left Idler Bracket
	922237	Right Idler Bracket
36	253427	Wheel Arm Chain Guard
37	01010800	5/16" x 1" H.H.C.S. w/Flatwasher, Lockwasher & Hex Nut
38	335125	3/4" x 2" H.H.C.S. w/Lockwasher & Hex Nut
39	944470	Jack Holder
40	331926	1/2" x 2" H.H.C.S. w/Flatwasher, Lockwasher & Hex Nut
41	942094	Sprocket Carrier Mount Plate
42	942086	Sprocket Carrier
43	919886	Left Chain Tension Bracket
	919878	Right Chain Tension Bracket
44	500173	Idler Spring
45	01147800	1/2" x 1 1/2" H.H.C.S. w/Lockwasher & Hex Nut
46	197772	Chain Guard Mounting Bracket (Short)
48	937011	Wheel Bracket - Left
49	331926	1/2" x 2" H.H.C.S. w/Lockwasher & Hex Nut
50	197764	Chain Guard Mounting Bracket (Long)
51	01150200	1/4" x 1/2" H.H.C.S. w/Lockwasher
52	530238	15" x 6" - 5 Bolt Wheel Rim (Tire Optional)
53	185017	Revolution Counter Bracket
54	01029800	1/2" x 1" H.H.C.S. w/Lockwasher & Hex Nut
55	603621	Revolution Counter—15'
	603753	Revolution Counter—20'
56	01144500	5/16" x 3/4" H.H.C.S. w/Lockwasher & Hex Nut
57	934695	Chain Guard - Left
	934703	Chain Guard - Right
58	932269	Chain Guard Latch Pin Bracket
59	332577	3/16" Hair Pin
60	330449	3/4" x 4 1/2" Clevis
61	330456	7/16" Klick Pin
62	305425	Chain Guard Hinge Pin w/3/16" x 1" Cotter Pin
63	927574	Support Stand
64	945642	Walkboard Tube Bracket
65	334300	1/2" x 3 1/2" H.H.C.S. w/Flatwasher & Locknut
66	944017	Walkboard Pivot Bracket
67	945550	Walkboard (56")
68	333690	1/2" x 4" Carriage Bolt w/Flatwasher, Lockwasher & Hex Nut
69	331900	3/8" x 4" H.H.C.S. w/Lockwasher & Hex Nut
70	848192	86" x 7 1/2" - 3800 Box Assembly - Left
	848218	86" x 8" - 3800 Box Assembly - Left
	848234	86" x 10" - 3800 Box Assembly - Left
	848135	112" x 7 1/2" - 3800 Box Assembly - Left
	848150	112" x 8" - 3800 Box Assembly - Left
	848176	112" x 10" - 3800 Box Assembly - Left
71	334458	1/2" x 6" H.H.C.S. w/Lockwasher & Hex Nut
72	848184	86" x 7 1/2" - 3800 Box Assembly - Right
	848200	86" x 8" - 3800 Box Assembly - Right
	848226	86" x 10" - 3800 Box Assembly - Right

Item No.	Part No.	Description
	848127	112" x 7 1/2" - 3800 Box Assembly - Right
	848143	112" x 8" - 3800 Box Assembly - Right
	848168	112" x 10" - 3800 Box Assembly - Right
73	600106	Hose Clamp
74	570507	Clear Plastic Tube (12 1/4")
75	332809	1" x 5" H.H.C.S. w/Lockwasher
76	919852	Lower Hitch Top Plate
77	937771	Feed Tube Bracket (Front)
78	331835	1/4" x 1" H.H.C.S. w/Lockwasher & Hex Nut
79	196394	Feed Tube Mounting Bar (85")
	196295	Feed Tube Mounting Bar (115 1/2")
80	944306	Spring Mounting Bracket
81	335273	1/2" x 7 1/2" H.H.C.S. w/Lockwasher & Hex Nut
82	334649	1/2" x 4" x 5 3/4" U-Bolt w/Lockwasher & Hex Nut
83	334284	3/4" x 6 1/2"" H.H.C.S. w/Lockwasher & Hex Nut
85	185108	Wheel Assembly Mounting Plate
87	925537	Bearing Bracket
88	333310	1/2" x 3 1/2" Carriage Bolt w/Flatwasher, Lockwasher & Hex Nut
89	602359	Wood Idler
90	01158500	3/8" x 1 1/4" H.H.C.S. w/Lockwasher & Hex Nut
91	936302	Chain Idler Bracket - Right
	936310	Chain Idler Bracket - Left
92	928853	15' Bed Drill Frame
	926188	20' Bed Drill Frame
93	332528	3/4" x 1 1/4" Machine Bushing (18 Ga.)
94	332916	3/16" x 1" Cotter Pin
95	500330	Spring
96	430439	46 Tooth 2040 Sprocket
97	332890	3/8" x 1 3/4" Carriage Bolt w/Lockwasher & Hex Nut
98	931816	Spring Slide Guide
99	937904	Spring Retainer Bar Brace
100	186924	Spring Retainer Clamp Plate
102	01057900	1/4" x 3/4" H.H.C.S. w/Lockwasher & Hex Nut
103	600445	S.M.V. Sign
104	929034	S.M.V. Sign Mounting Bracket
105	186866	Spring Retainer Bar (84")
	186874	Spring Retainer Bar (116")
106	308122	Handle
107	934687	Chain Guard Box Hinge - Right
	934679	Chain Guard Box Hinge - Left
108	570341	Lid Latch
109	570770	Box Window
110	530444	5000# Jack
111	931667	Box Lid - 112" Box
	934315	Box Lid - 86" Box
112	936922	4thBar Bracket Mounting Plate

3800 Opener Parts List
Figure 6-2

Item No.	Part No.	Description
1	944249	Double Disc Opener - Front - Short
	944256	Double Disc Opener - Rear - Long
2	842484	Double Disc Blade Assemble - Left
3	330720	5/8" x 1 1/8" 14 Ga. Machine Bushing
4	146209	Spacer Bushing
5	400747	Dust Seal
6	570754	Convoluted Rubber Hose
7	600106	Hose Clamp
8	570523	1" Int. Pipe Thread Protector
9	335919	3/8" x 1 1/4" Carriage Bolt w/Lockwasher & Hex Nut
11	842476	Double Disc Blade Assembly - Right
12	330100	1/2" x 4 1/2" H.H.C.S. (Gr. 5) w/Lockwasher & Hex Nut
13	254532	Opener Scraper
14	147561	Spring Guide Bushing
15	944140	Spring Guide
16	944322	Quadrant Mounting Plate - Right
17	944314	Quadrant Mounting Plate - Left
18	01152800	5/16" x 1 3/4" H.H.C.S. (Gr. 5) w/Lockwasher & Hex Nut
19	550533	Collar
20	501130	Spring
21	335240	1/2" x 3 1/2" H.H.C.S. (Gr. 5)w/Locknut
22	944116	Press Wheel Strap
23	334300	1/2" x 3 1/2" H.H.C.S. (Gr. 5) w/Locknut
24	944298	Press Wheel Adjustment Quadrant
25	944272	Depth Control Arm
26	501213	Quadrant Adjustment Spring
27	937458	Quadrant Adjustment Plug Bracket
28	333633	1/4" x 1 1/4" H.H.C.S. w/Flatwasher & Locknut
29	146225	1" Press Wheel Bushing
30	849752	2" x 13" Press Wheel Assembly
	849976	2" x 13" Peaked Press Wheel Assembly
	849760	3" x 13" Press Wheel Assembly
	530592	1" x 12" Press Wheel Assembly
31	146217	3/8" Press Wheel Bushing
32	02274900	5/8" x 5" H.H.C.S. w/Locknut
33*	945527	Spring Rod
34*	334813	5/16" x 1 1/2" Roll Pin
35*	500942	Spring
36*	945535	Spring Adjustment
37*	333286	7/8" I.D. Machine Bushing
38*	945543	Spring Rod Pivot
39*	330498	3/16" x 1 1/4" Cotter Pin
40*	334128	Flange Plug w/Zerk
41	334748	5/16" x 1/2" Square Head Set Screw (Use Only With 1" x 12" Press Wheel Assembly - 530592)

* Optional

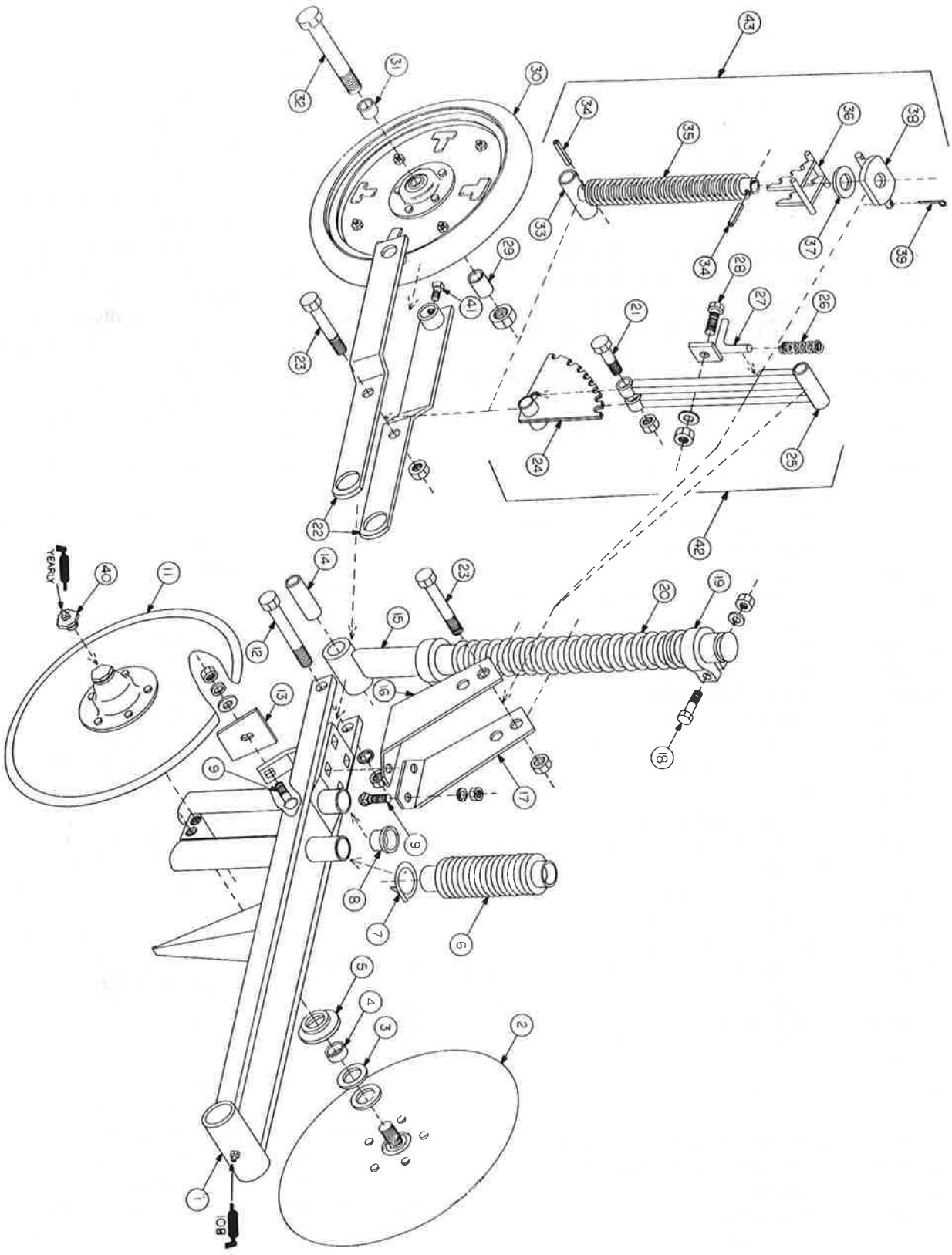
YEARLY
BOT

Caddy Parts List
Figure 6-3

Item No.	Part No.	Description
1	952424	Mono Hitch Clevis
2	205096	Mono Hitch Plate
3	143263	1" x 3" H.H.C.S. (Gr. 5) w/Lockwasher & Hex Nut
4	530444	5000# Jack
5	333732	1" x 6½" H.H.C.S. (Gr. 5) w/Locknut
6	932962	Clevis Pin
7	330068	½" x 1½" H.H.C.S. w/Lockwasher & Hex Nut
8	906297	Hose Carrier
9	954784	Caddy-A Frame
10	332718	⅝" x 1¼" Set Screw w/Jam Nut
11	944413	Coulter Spring Bolt Bracket
12	146035	Coulter Lock Collar
13	147678	Coulter Bushing
15	502062	Wavy Coulter Blade
	501536	Ripple Coulter Blade
	501528	Plain Coulter Blade
16	335927	½" x 1" H.H.C.S. Nat. Fine (Gr. 5)
17	944421	Coulter Pivot
18	500306	Spring
19	944397	Coulter Mount
20	944405	Coulter Mounting Bracket
21	944447	Spring top Plate
22	333088	⅝" x 4" x 5¼" U-Bolt w/Lockwasher & Hex Nut
23	935171	Hydraulic Pipe Carrier Spacer
24	570366	¼" x 1¾" x 7¼" Rubber Pad
25	331710	5/16" x 2½" H.H.C.S. w/Lockwasher & Hex Nut
26	931394	Hydraulic Pipe Carrier Plate
27	465476	84" Hydraulic. Pipe
29	330126	½" x 5½" H.H.C.S. (Gr. 5) w/Lockwasher & Hex Nut
30	944371	15' Coulter Bar
	944389	20' Coulter Bar
31	944199	Coulter Bar Lift
32	116301	Frame Mast Tube
33	334870	1" x 4" H.H.C.S. (Gr. 5) w/Locknut
34	944348	Front Turn Buckle
35	334987	1" x 3" H.H.C.S. (Gr. 5) w/Locknut
36	208603	1¼" Hex Jam Nut
37	930248	Adjusting Screw
38	945634	Caddy Lockout
39	945618	Adjustable Lockout
40	465393	4" x 8" Hydraulic Cylinder w 1¼" Ram & Depth Control

Item No.	Part No.	Description
41	330589	1" x 5" H.H.C.S. (Gr. 5) w/Locknut
42	334060	1" x 7½" H.H.C.S. (Gr. 5) w/Locknut
43	945626	Lockout Pin
44	334185	¾" x 6" x 5½" U-Bolt w/Lockwasher & Hex Nut
45	945170	Caddy Weight Mount Bracket
46		Spindle Lug Bolt (included in Spindle Assembly)
47	017178	12:5L x 15" Tire Mounted
48	848002	Spindle & Hub Assembly
50	603332	Caddy Cylinder Lug Bracket
52	335273	½" x 7½" H.H.C.S. (Gr. 5) w/Lockwasher & Hex Nut
53	944173	Mast Lug Bracket
54	944165	Lug Base Bolt Plate
55	331223	⅝" x 1¾" Square Head Set Screw w/ Jam Nut
56	330357	1" x 5½" H.H.C.S. (Gr. 5) w/Locknut
57	950634	Caddy Float Arm Bar
58	848010	Caddy Float Arm Assembly
59	950626	Cross Member
60	950659	Adjustment Screw
62	950642	Rear Turn Buckle
64	466797	4" x 12" Hydraulic Cylinder - 1½" Ram - ¾-16 SAE Ports
66	932723	Pin w/7/16" Klick Pin
67	334094	¾" x 3" H.H.C.S. (Gr. 5) w/Lockwasher & Hex Nut
68	200832	Bottom Lockout Bar
69	332106	1" x 4½" H.H.C.S. (Gr. 5) w/Locknut
70	200840	Top Lockout Bar
71	334789	1" x 3½" H.H.C.S. (Gr. 5) w/Locknut
72	331975	⅝" x 2" H.H.C.S. (Gr. 5) w/Lockwasher & Hex Nut
73	946384	End Tow Hitch Mount
74	932723	Pin
75	946335	Tow Hitch
76	530402	2000# Jack
77	946368	Mast Base Plate
78	946350	Mast Tube Frame
79	331330	⅝" x 3½" H.H.C.S. w/Lockwasher & Hex Nut
80	946376	End Tow Axle
81	930420	Pin w/7/16" Klick Pin

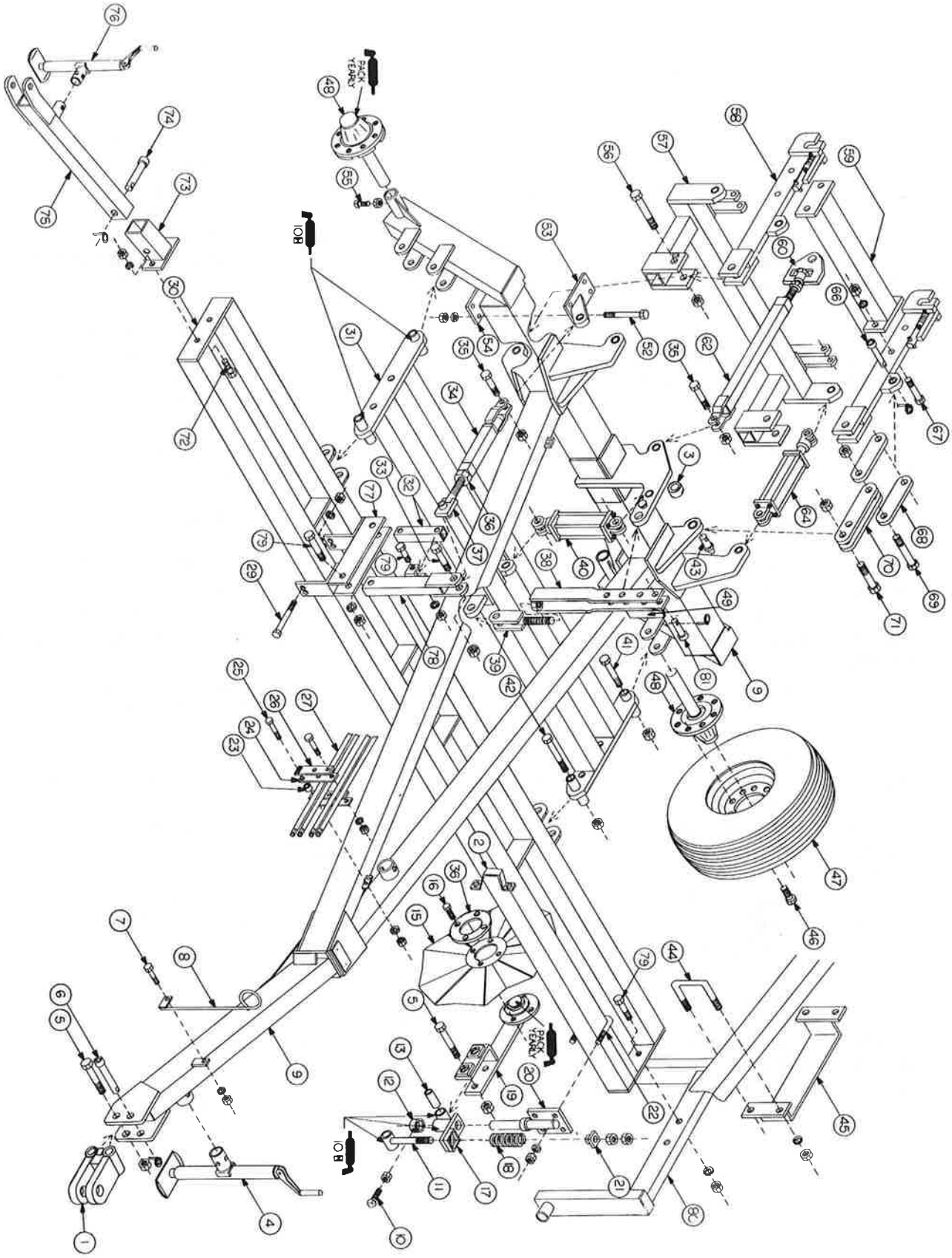

FIGURE 6-3

15' & 20' Spring Tine Harrow
Figure 6-4

Item No.	Part No.	Description
1	334748	5/16" x 1/2" Square Head Set Screw
2	147686	Lock Collar Spool
3	334243	3/8" x 2" H.H.C.S. (Gr. 5) w/Lockwasher & Hex Nut
4	200774	Harrow Adjustment Plate
5	147512	Harrow Pipe
6	952416	Harrow Pull Mount Bracket
7	952408	Adjustable Harrow Tube
8	501544	Harrow Tine
9	336032	5/8" x 1 3/8" x 2 9/16" U-Bolt w/Lockwasher & Hex Nut
10	20226	Adjustment Plate
11	945576	Pull Mount Bracket
12	331983	5/8" x 4" H.H.C.S. (Gr. 5) w/Lockwasher & Hex Nut
13	335620	5/8" x 3" H.H.C.S. (Gr. 5) w/Lockwasher & Hex Nut
14	332973	5/8" x 3 1/2" All-Thread Bolt (Gr. 5) w/Lock Nut
15	334300	1/2" x 3 1/2" H.H.C.S. (Gr. 5) w/Lockwasher & Hex Nut
16	01572700	5/8" Hex Nylock Nut

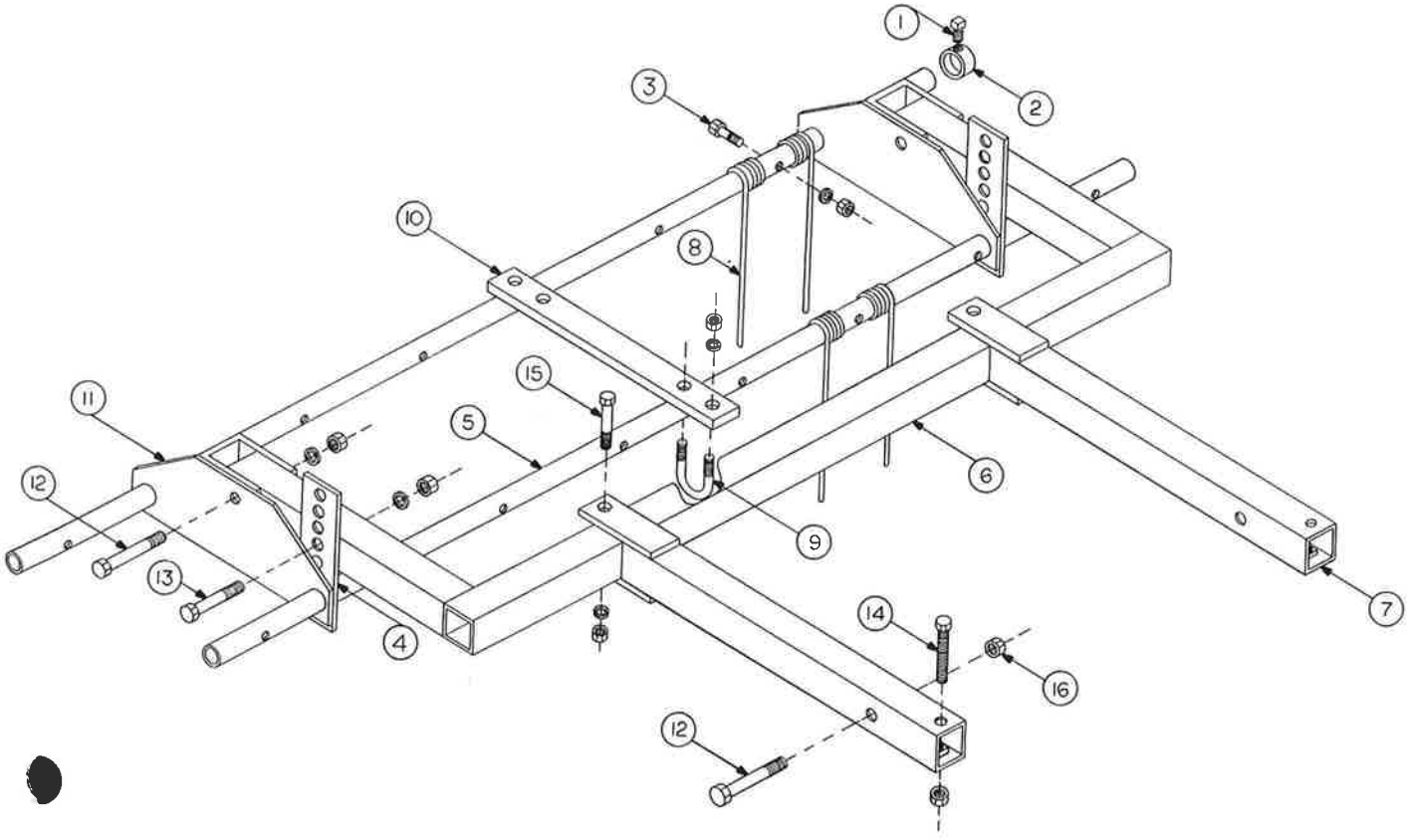

FIGURE 6-4

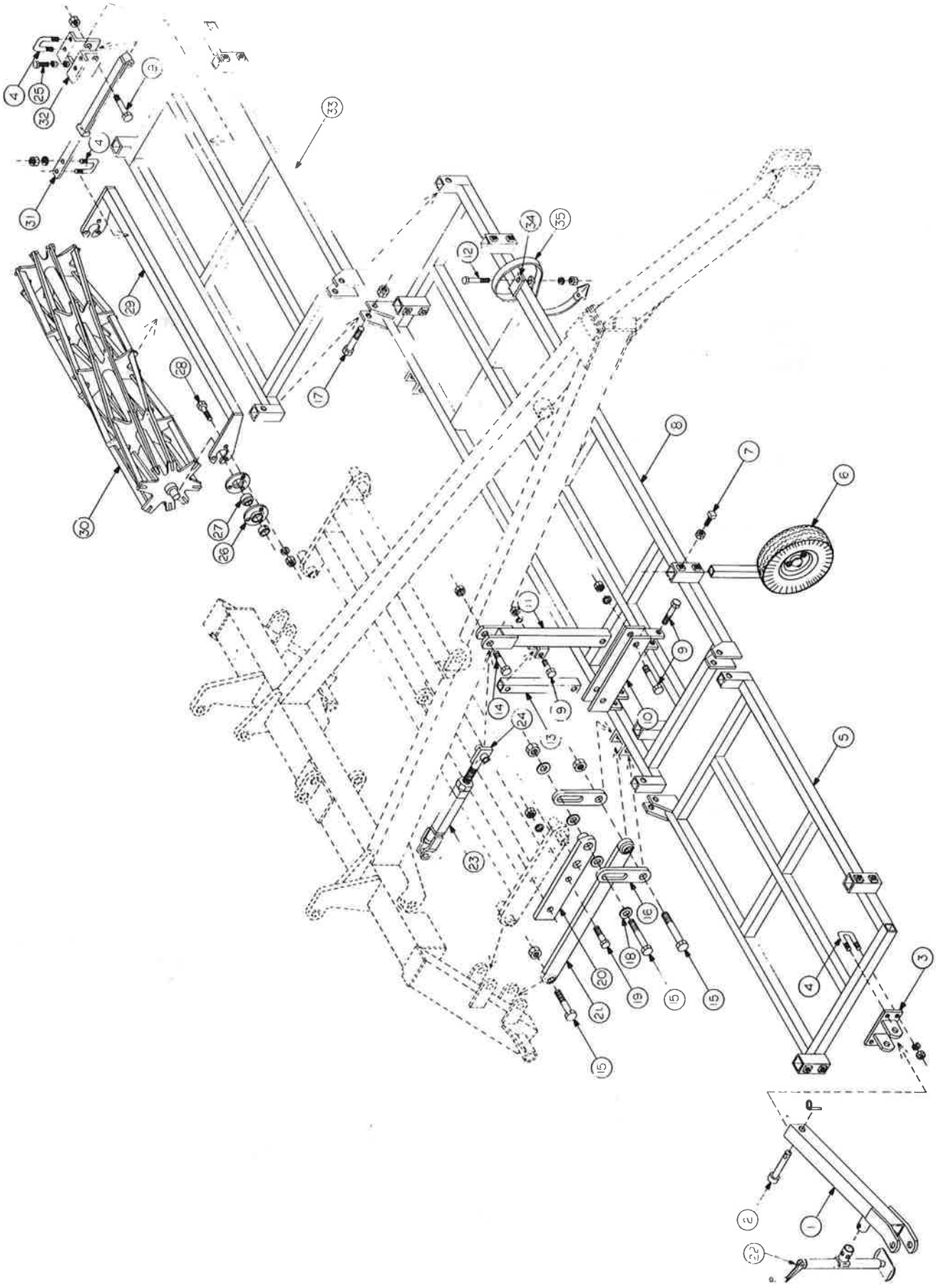

FIGURE 6-5

Scratcher
Figure 6-5

Item No.	Part No.	Description
1*	946335	Tow Hitch
2*	932723	Pin
3*	946327	End Tow Mount
4*+	331132	1/2" x 2" x 3 1/2" U-bolt w/Lockwasher & Hex Nut
5	946244	20' Right Scratcher Wing Frame (4" Spacing)
6	849067	Gauge Wheel - Right
	849059	Gauge Wheel - Left
7	331223	5/8" x 1 3/4" Square Headset Screw w/Jam Nut
8	946228	20' Center Scratcher Frame (4" Spacing)
	946210	15' Scratcher Frame (4" Spacing)
9	01116300	5/8" x 3 1/2" H.H.C.S. w/Lockwasher & Hex Nut
10	946319	Frame Mast Base
11	946301	Frame Mast Tube
12	334300	1/2" x 3 1/2" H.H.C.S. w/Lockwasher & Hex Nut
13	116343	Frame Mast Tube
14	334870	1" x 4" H.H.C.S. (Gr. 5) w/Locknut
15	332809	1" x 5" H.H.C.S. (Gr. 5) w/Locknut
16	202671	Scratcher Float Lug
17	01110600	3/4" x 4" H.H.C.S. (Gr. 5) w/Locknut
18	330407	1" Flat Washer
19	335620	5/8" x 3" H.H.C.S. (Gr. 5) w/Lockwasher & Hex Nut
20	946285	Lift Bar Extension
21	930081	Push Arm
22*	530402	2000# Jack
23	930172	Turn Buckle
24	930248	Adjusting Screw
25+	332973	5/8" x 3 1/2" All Thread Bolt w/Hex Jam Nut
26+	400069	Flangette
27+	400051	Bearing & Lock Collar
28+	01158500	3/8" x 1 1/4" H.H.C.S. w/Lockwasher & Hex Nut
29+	946418	Basket Mounting Frame
30+	946392	Scratcher Basket
31+	501700	Basket Spring
32+	946400	Spring Bracket
33	946236	Left Scratcher Wing Frame (4" Spacing)
34	188664	Danish Tooth Clamp
35	501247	Danish Tine
*	849042	Hitch Assembly
+	849075	Basket Assembly

3800 Legume Box Option
Figure 6-6

Item No.	Part No.	Description
1	943993	Chain Guard Hinge - Right
	944009	Chain Guard Hinge - Left
2	147538	Legume Feed Tube
3	943951	Legume Feed Tube Mounting Bracket
4	943944	Legume Hose Tray Bracket
5	196394	Feed Tube Mounting Bar
6	191577	Idler Bracket
7	848291	Legume Box Assembly - Right (15' x 7 1/2")
	848309	Legume Box Assembly - Left (15' x 7 1/2")
	848317	Legume Box Assembly - Right (15' x 8")
	848325	Legume Box Assembly - Left (15' x 8")
	848333	Legume Box Assembly - Right (15' x 10")
	848341	Legume Box Assembly - Left (15' x 10")
	848358	Legume Box Assembly - Right (20' x 7 1/2")
	848366	Legume Box Assembly - Left (20' x 7 1/2")
	848374	Legume Box Assembly - Right (20' x 8")
	848382	Legume Box Assembly - Left (20' x 8")
	848390	Legume Box Assembly - Right (20' x 10")
	848408	Legume Box Assembly - Left (20' x 10")
8	601955	Wood Idler
9	600106	Feed Tube Clamp
10	570283	Feed Tube
11	570754	Convoluted Hose
12	500330	Spring
13	431304	2040 Chain - 85 Links
14	430488	12 Tooth 2040 Sprocket
15	430439	46 Tooth 2040 Sprocket
16	333492	1/2" x 4" x 4 1/2" U-Bolt w/Lockwasher & Hex Nut
17	01212000	1/2" x 1 1/2" Carriage Bolt w/Lockwasher & Hex Nut
18	332916	3/16" x 1" Cotter Pin
19	332528	3/4" x 1 1/4" Bushing - 18 ga.
20	334946	1/2" x 3" H.H.C.S. w/Flat Washer, Lockwasher & Hex Nut
21	01029800	1/2" x 1" H.H.C.S. w/Lockwasher & Hex Nut
22	331835	1/4" x 1" H.H.C.S. w/Lockwasher & Hex Nut
23	202408	S.M.V. Sign Bracket
24	01057900	1/4" x 3/4" H.H.C.S. w/Lockwasher & Hex Nut

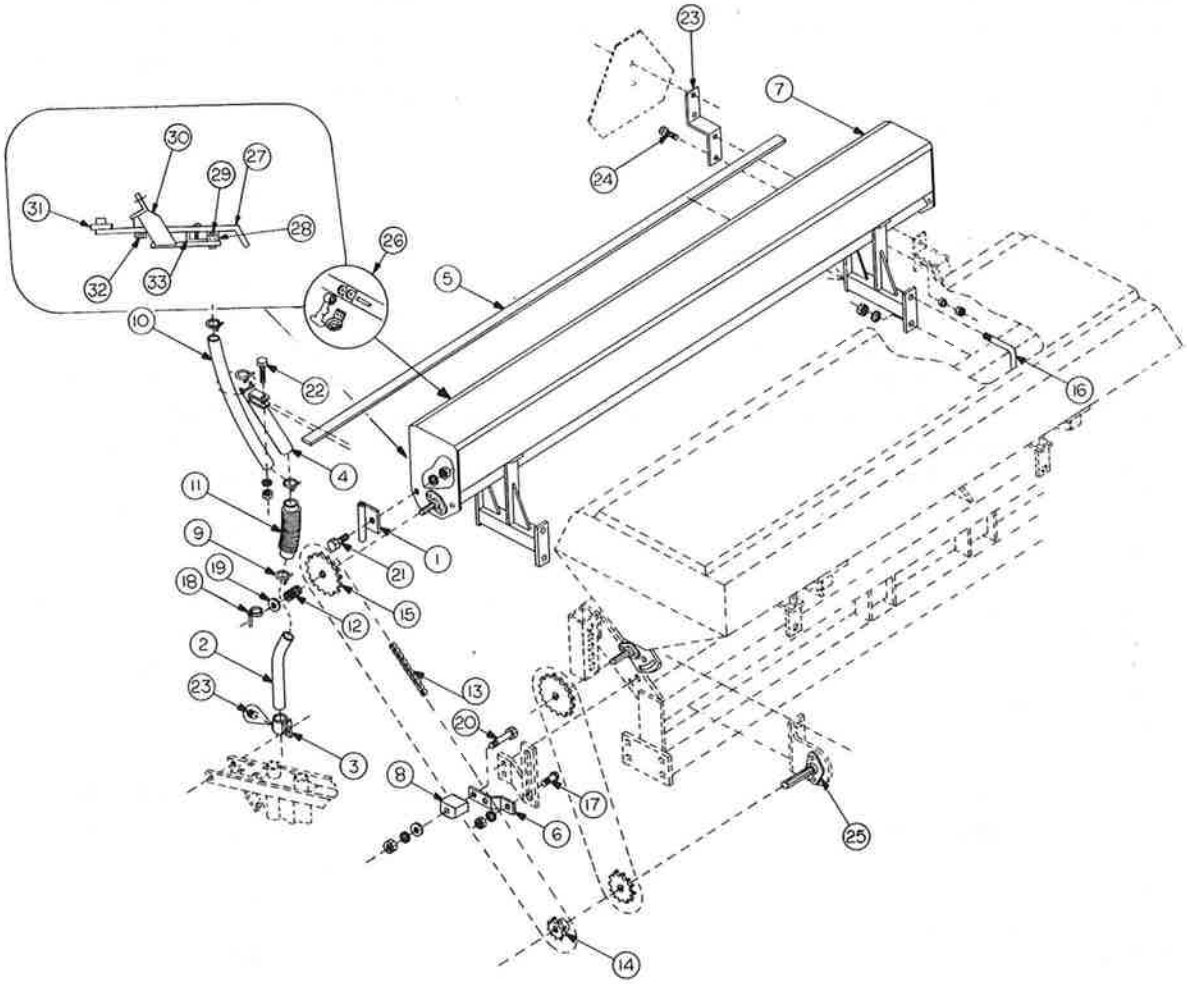
23
7
30
27
29
31
28
26
32
33
5
10
22
16
4
11
9
21
1
19
18
15
12
2
13
23
20
3
8
17
6
25
14

FIGURE 6-6

3800 Drill Hydraulic Fold Over Marker
Figure 6-7

Item No.	Part No.	Description
1	306670	Base Mount Bracket Pin
2	334243	3/8" x 2" H.H.C.S. w/Lock Nut
3	938480	Marker Base Mount Bracket
5	938498	Marker Base Arm
6	945816	Drill Marker Mount
7	333591	3/4" x 4" x 5 1/2" U-Bolt w/Lockwasher & Hex Nut
8	468173	3" x 20" Hydraulic Cylinder
10	334813	5/16" x 1 1/2" Roll Pin
12	330407	1" Flat Washer
13	306688	Hydraulic Marker Cylinder Bracket Pin
14	938514	Hydraulic Marker Cylinder Bracket
15	500173	Spring
16	938472	Hydraulic Marker
17	331223	5/8" x 1 1/2" Set Screw w/Hex Jam Nut
18	919605	Adjustable Marker Arm
19	334946	1/2" x 3" H.H.C.S. w/Lockwasher & Hex Nut
20	842500	Marker Blade Assembly

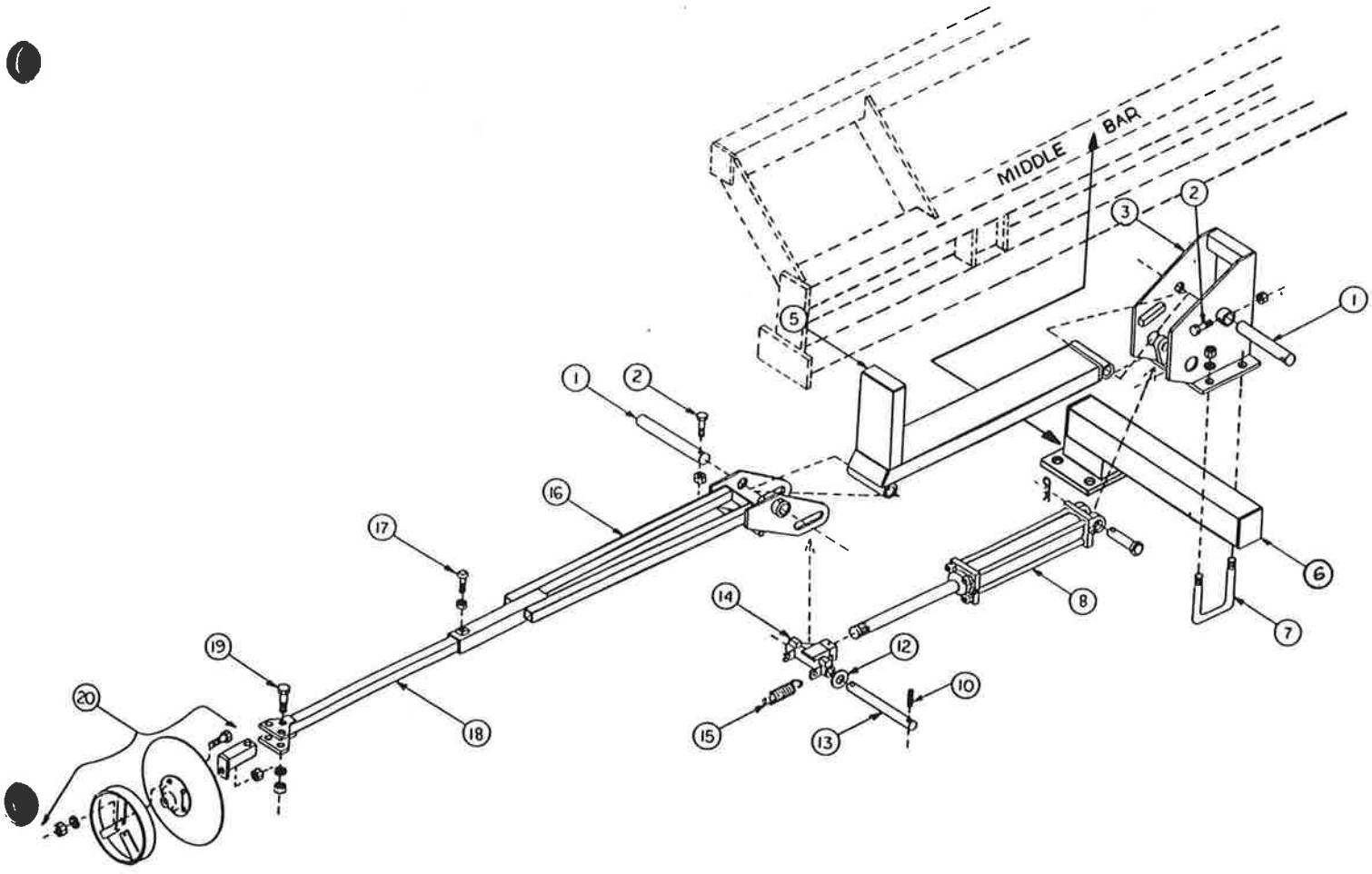

FIGURE 6-7

Marker Blade Assembly
Figure 6-8

Item No.	Part No.	Description
1	919639	Marker Angle Adjustment Tube
2	400747	Neoprene Seal
3	146217	7/8" O.D. x .635" I.D. x 3/8" Bushing
4	501171	Marker Disc Blade
5	601393	Cellulose Fiber Gasket
6	842492	Marker Bearing Assembly
7	928564	Depth Band
8	330811	5/16" Hex Nut
9	330845	5/16" Lockwasher
10	01144500	5/16" x 3/4" H.H.C.S.
11	331538	5/8" Jam Nut
12	334128	Flange Plug w/Zerk

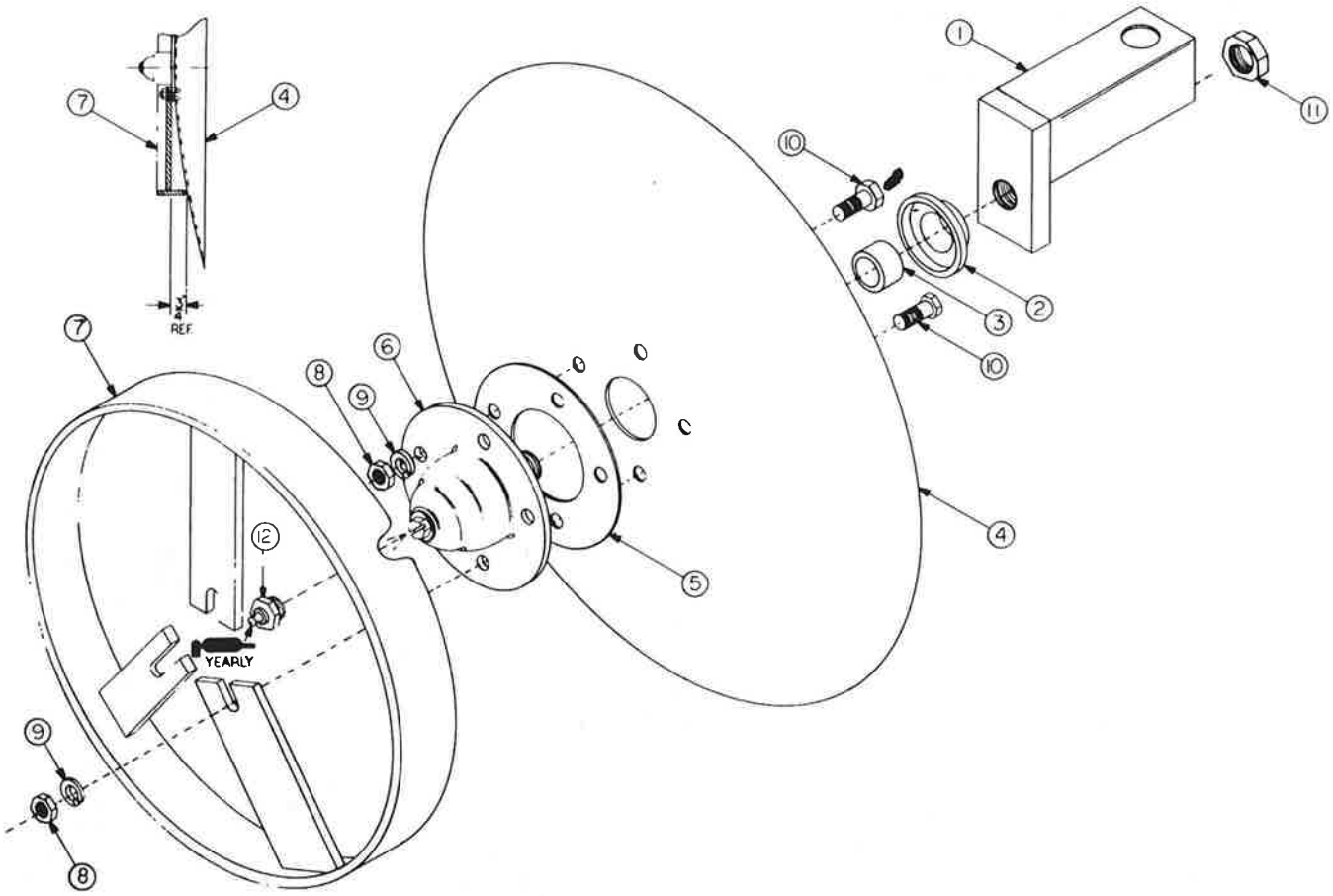

FIGURE 6-8

15' Double Marker
Figure 6-9

Item No.	Description
1	Sequence Valve
2	21" Cable Tie
3	3/8" Male Solid x 1/4" Female Swivel 90° Elbow (1/16" Restricted)
4	3/8" Male Solid x 1/4" Female Swivel 90° Elbow
5	3/4" Male O-Ring x 1/4" NPSM Female Swivel 90° Elbow
6	3/8" F Solid x 3/8 F Swivel x 3/8" F Swivel Tee
7	3/4" Male O-Ring x 3/8" Swivel Adapter
8	Sequence Valve Bracket
9	3/8" x 1/4" Bushing
10	3/8" Hydraulic Hose x 265"
11	1/4" Hydraulic Hose x 98"
12	1/4" Hydraulic Hose x 115"
13	1/4" Hydraulic Hose x 138"
14	1/2" x3/8" Reducer

FIGURE 6-9

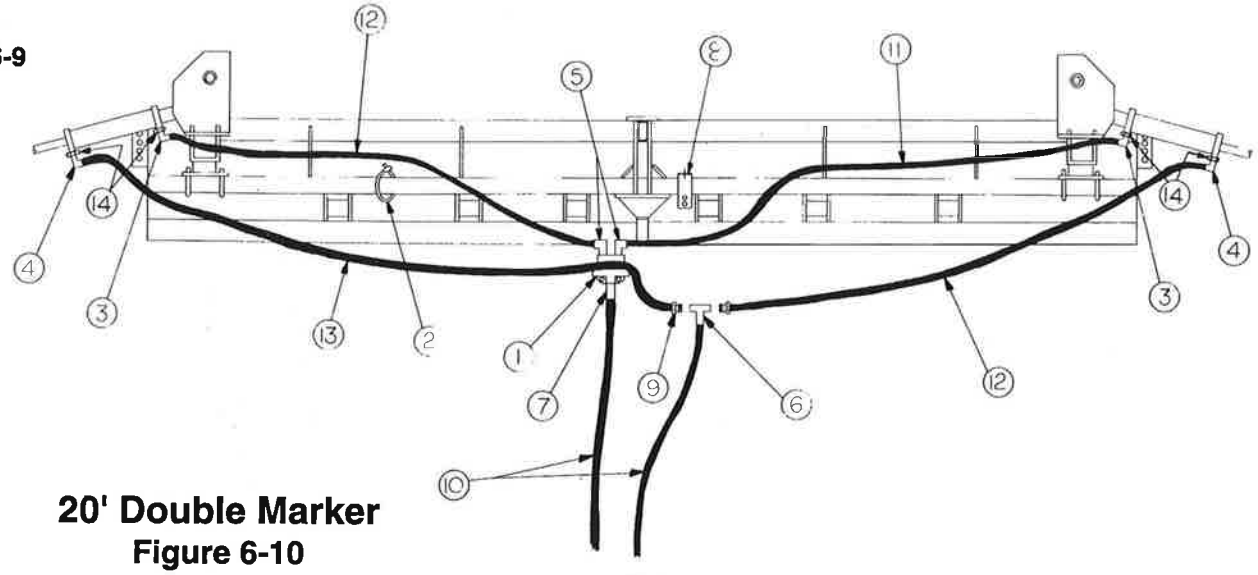

20' Double Marker
Figure 6-10

Item No.	Description
1	Sequence Valve
2	21" Cable Tie
3	3/8" Male Solid x 1/4" F Swivel 90° Elbow (1/16" Restricted)
4	3/8" Male Solid x 1/4" F Swivel 90° Elbow
5	3/4" Male O-Ring x 1/4" NPSM F Swivel 90° Elbow
6	3/8" F Solid x 3/8" F Swivel x 3/8" Female Swivel Tee
7	3/4" Male O-Ring x 3/8" Swivel Adapter
8	Sequence Valve Bracket
9	3/8" x 1/4" Bushing
10	3/8" Hydraulic Hose x 296"
11	1/4" Hydraulic Hose x 138"
12	1/4" Hydraulic Hose x 180"
13	1/4" Hydraulic Hose x 156"
14	1/2" x 3/8" Reducer

FIGURE 6-10

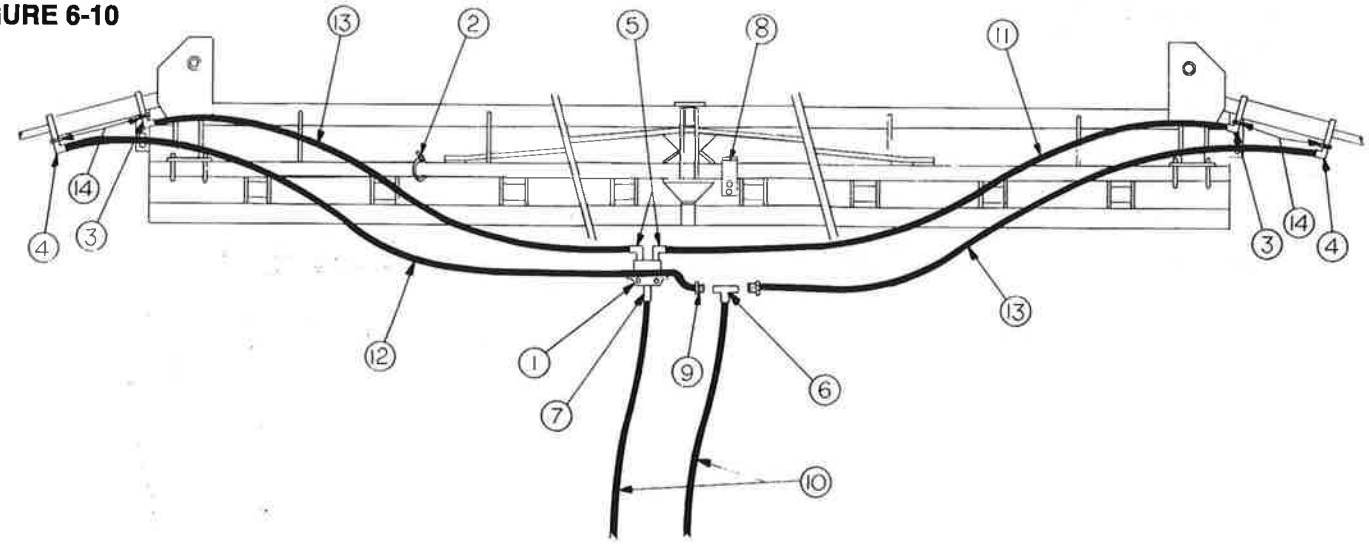

15' Single Marker
Figure 6-11

Item No.	Description
1	3/8" Hydraulic Hose x 296"
2	3/8" Pipe Coupler
3	3/8" Male x 1/4" Female Swivel 90° Elbow (1/16" Restricted)
4	3/8" Male x 1/4" Female Swivel 90° Elbow
5	21" Cable Tie
6	1/4" Hydraulic Hose x 115"
7	1/4" Hydraulic Hose x 138"
8	1/2" x 3/8" Reducer

FIGURE 6-11

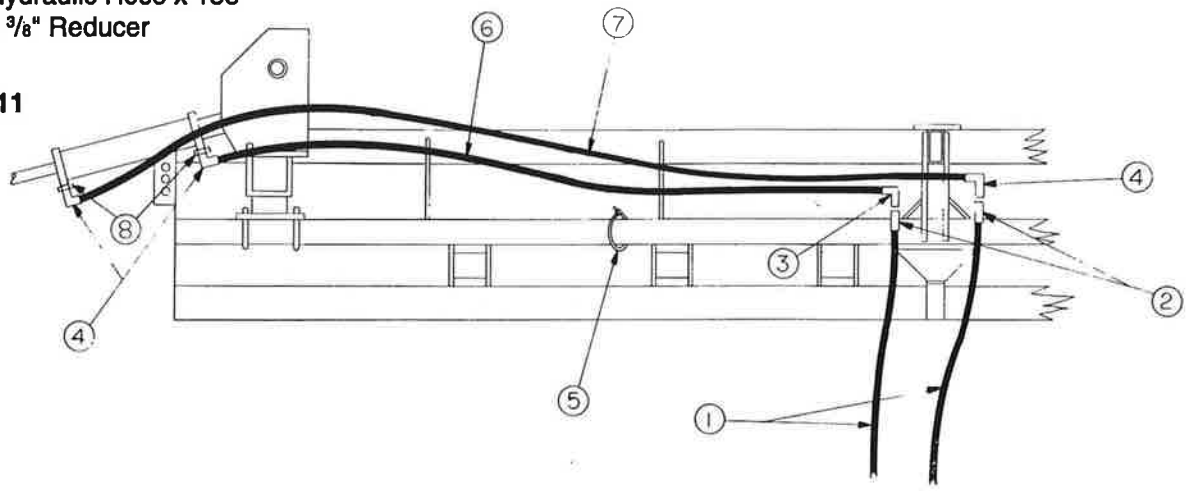

20' Single Marker
Figure 6-12

Item No.	Description
1	3/8" Hydraulic Hose x 296"
2	3/8" Pipe Coupler
3	3/8" Male x 1/4" Female Swivel 90° Elbow (1/16" Restricted)
4	3/8" Male x 1/4" Female Swivel 90° Elbow
5	1/4" Hydraulic Hose x 156"
6	1/4" Hydraulic Hose x 180"
7	21" Cable Tie
8	1/2" x 3/8" Reducer

FIGURE 6-12

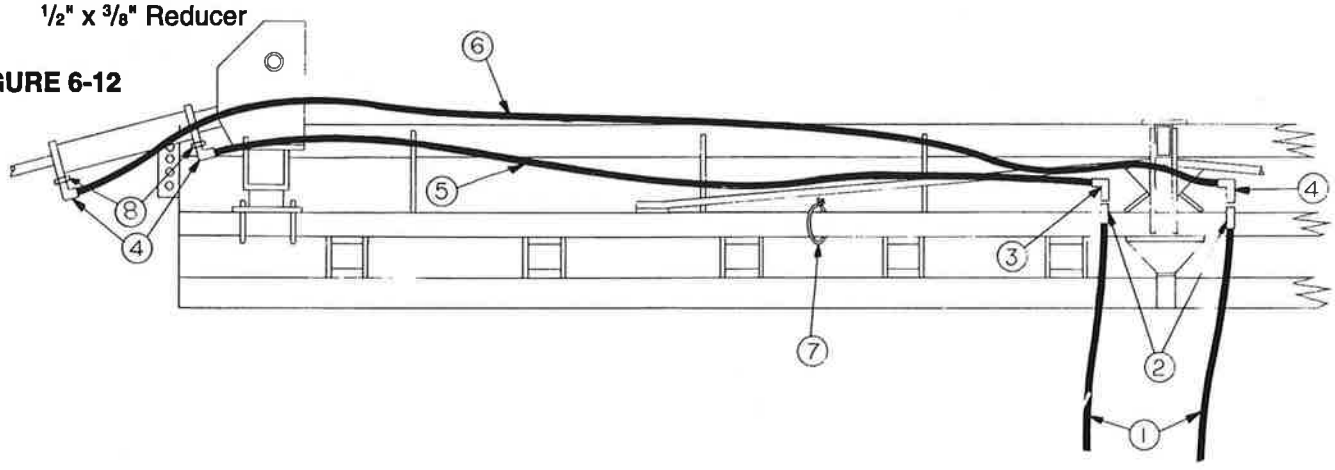

2" x 13" Press Wheel Assembly
849752
Figure 6-13

Item No.	Part No.	Description
1	02300200	5/16" x 2" H.H.C.S. (Gr. 5)
2	331611	5/16" Nylock Hex Nut
3	401042	Bearing
4	530428	2" x 13" Smooth Crown Presswheel
5	951947	2" x 13" Presswheel Half w/Ring
6	951954	2" x 13" Presswheel Half w/o Ring

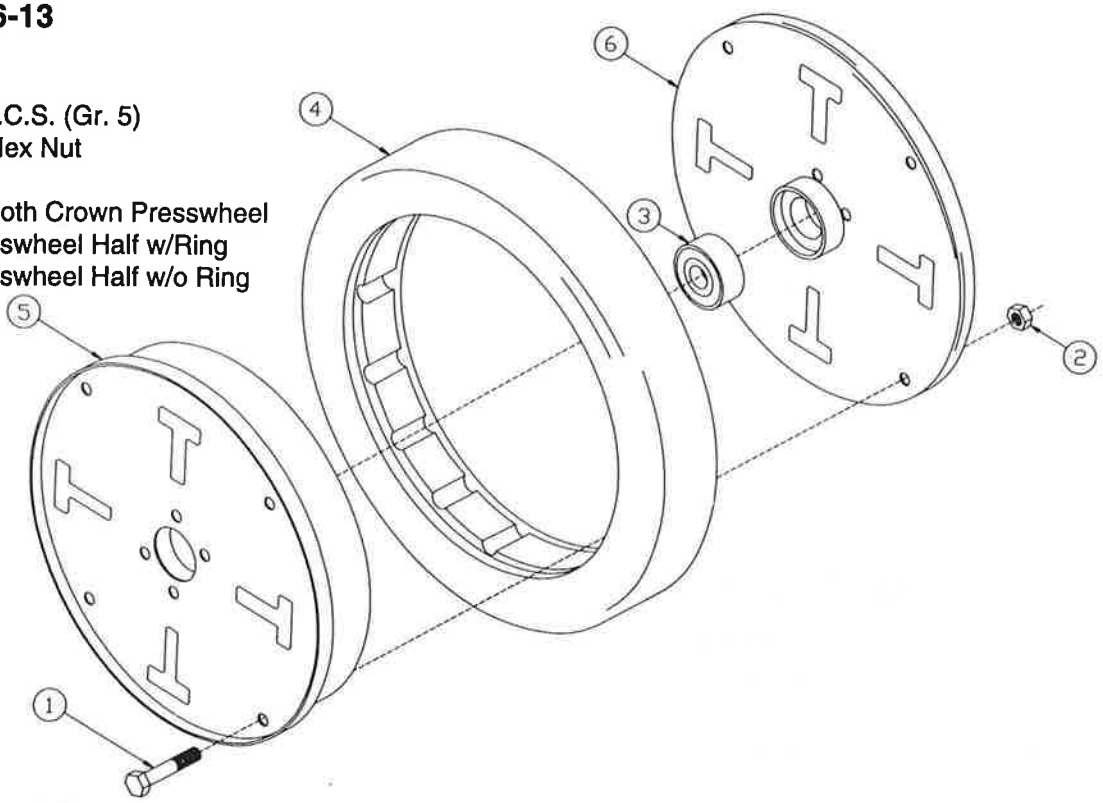

FIGURE 6-13

2" x 13" Peaked Press Wheel Assembly
849976
Figure 6-14

Item No.	Part No.	Description
1	02300200	5/16" x 2" H.H.C.S. (Gr. 5)
2	331611	5/16" Nylock Hex Nut
3	401042	Bearing
4	530576	2" x 13" PEAKED Presswheel
5	951947	2" x 13" Presswheel Half w/Ring
6	951954	2" x 13" Presswheel Half w/o Ring

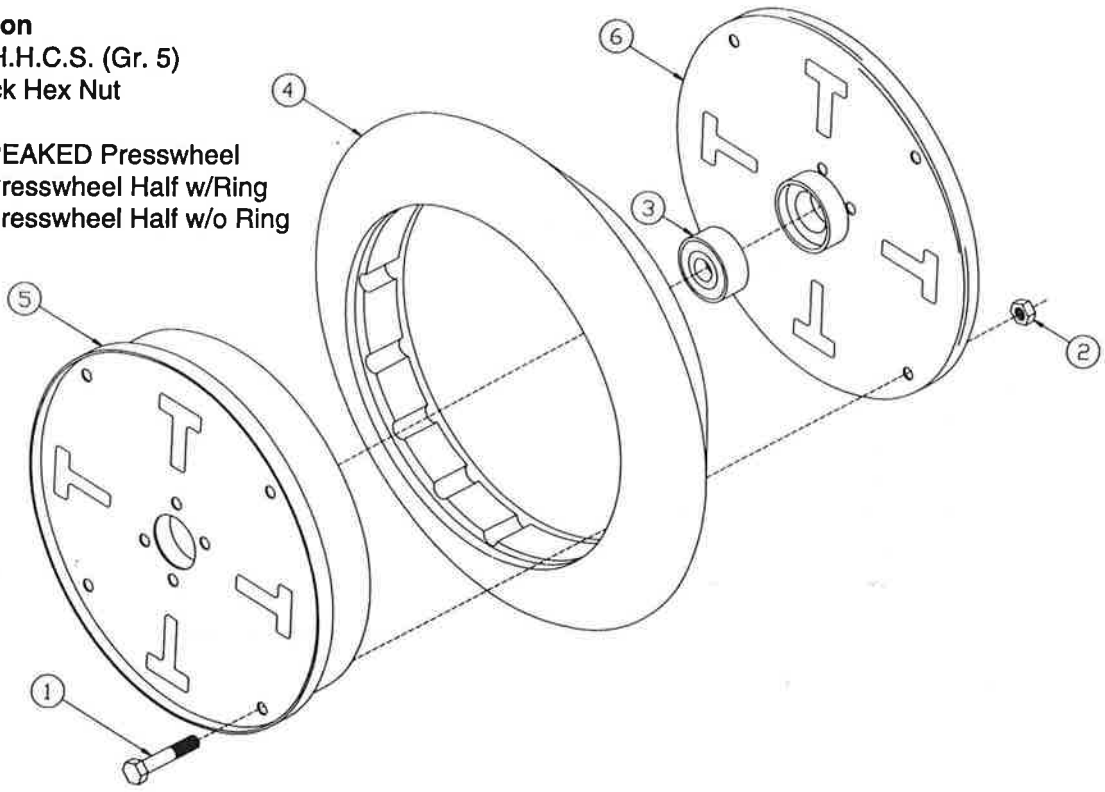

FIGURE 6-14

1" x 12" Press Wheel Assembly - Complete 530592
Figure 6-15

Item No.	Part No.	Description
1	570622	Press Wheel Half
2	530600	1" x 12" Rubber Press Wheel
3	401158	Bearing
4	331835	1/4" x 1" H.H.C.S.

FIGURE 6-15

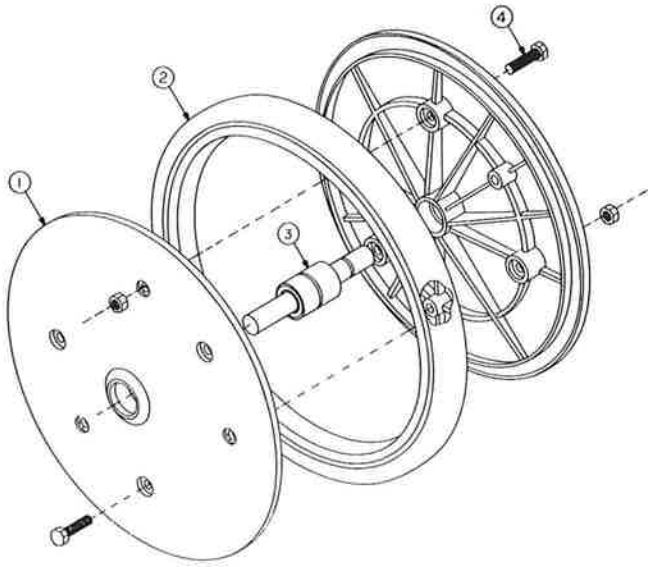

3" x 13" Press Wheel Assembly 849760
Figure 6-16

Item No.	Part No.	Description
1	334573	H.H.C.S. 5/16" x 2 3/4" (Gr. 5)
2	331611	5/16" Nylock Hex Nut
3	401042	Bearing
4	530493	3" x 13" Presswheel Tire
5	951962	3" x 13" Presswheel Half w/Ring
6	951970	3" x 13" Presswheel Half w/o Ring

FIGURE 6-16

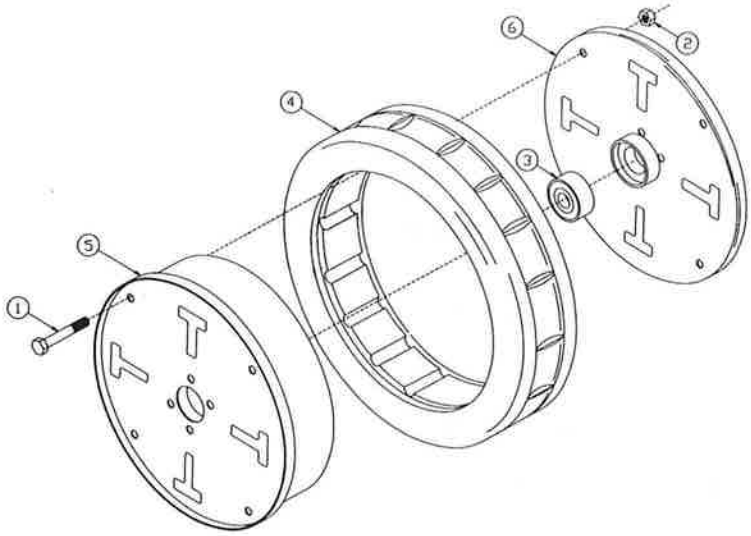

3" x 13" Press Wheel Assembly 852368
Figure 6-17

Item No.	Part No.	Description
1	334573	5/16" (Gr. 5) H.H.C.S.
2	331611	5/16" Nylock Hex Nut
3	401042	Bearing
4	530642	Presswheel 3" x 13" Center Rib
5	951962	3" x 13" Presswheel Half w/Ring
6	951970	3" x 13" Presswheel Half w/o Ring

FIGURE 6-17

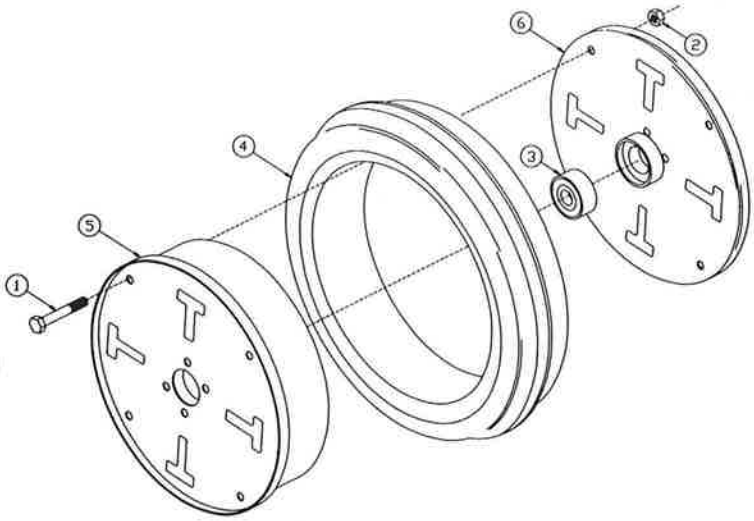

Coulter Spindle & Hub Assembly
401133
Figure 6-18

Item No.	Part No.	Description
1	600338	Dust Cap
2	335281	Cotter Pin
3	336008	Spindle Nut
4	336016	Spindle Washer
5	400382	Cone
6	400390	Cup
7	~~336024~~ 335927	Lug Bolt
8	401208	Hub w/Cups
9	400044	
10	401166	

FIGURE 6-18

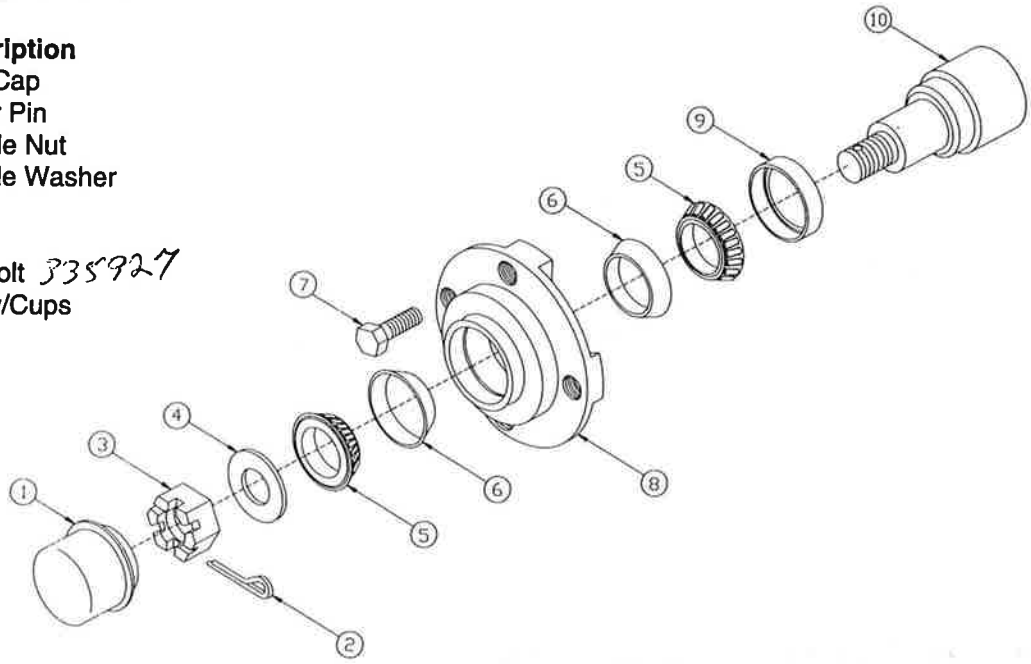

Spindle & Hub Assembly
848002
Figure 6-19

Item No.	Part No.	Description
1	603613	Dust Cap
2	02154300	Cotter Pin
3	331801	Slotted Nut
4	02080000	Spindle Washer
5	401687	Outer Cone
6	401679	Outer Cup
7	336297	Lug Bolt (1⅛")
8	550970	8 Bolt Hub w/Cups
9	401661	Inner Cup
10	401653	Inner Cone
11	401646	Seal
12	401125	Spindle (2⅛")

FIGURE 6-19

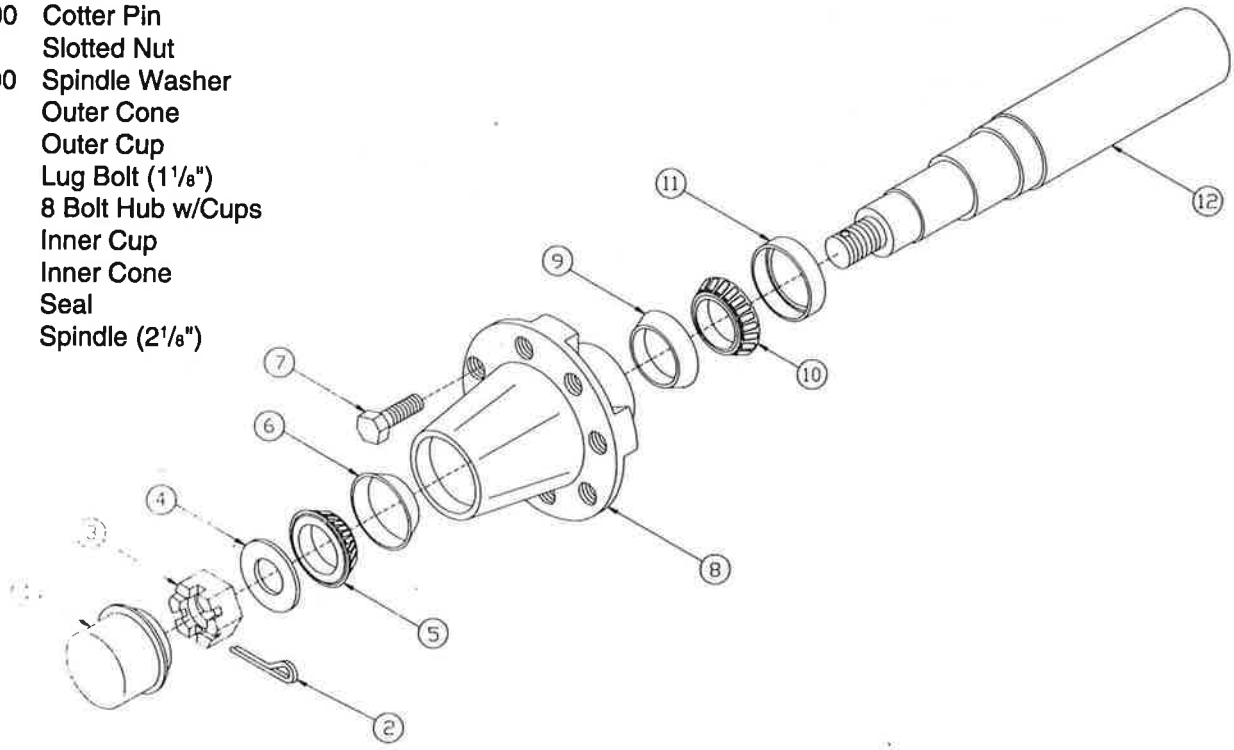

Double Disc Blade Assembly—Left
842484
Figure 6-20

Item No.	Part No.	Description
1	333872	Metal Flange Plug
2	334730	1/2" External Lock Washer
3	601351	5/16" x 1/2" Rivit
4	400713	Bearing Flange
5	334623	5/16" x 1 1/2" Left Hand Thread Hex Socket Button Head Cap Screw (Gr. 5)
6	401042	Bearing
7	601393	Cellulose Fiber Gasket
8	501189	13 1/5" Dia. Disc (3MM) Blade

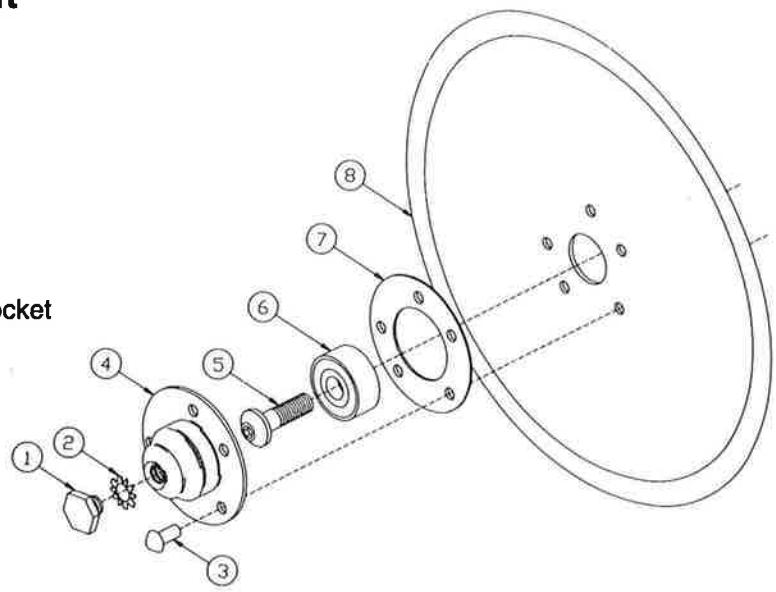

Double Disc Blade Assembly—Right
842476
Figure 6-21

Item No.	Part No.	Description
1	333872	Metal Flange Plug
2	334730	1/2" External Tooth Lock Washer
3	601351	5/16" x 1/2" Button Head Rivet
4	400713	Bearing Flange
5	334631	5/8" X 1 1/2" Right Hand Thread Hex Socket Button Head Cap Screw (Gr. 5)
6	401042	Bearing—204RY2
7	601393	Cellulose Fiber Gasket
8	501189	13 1/2" Flat Disc Blade

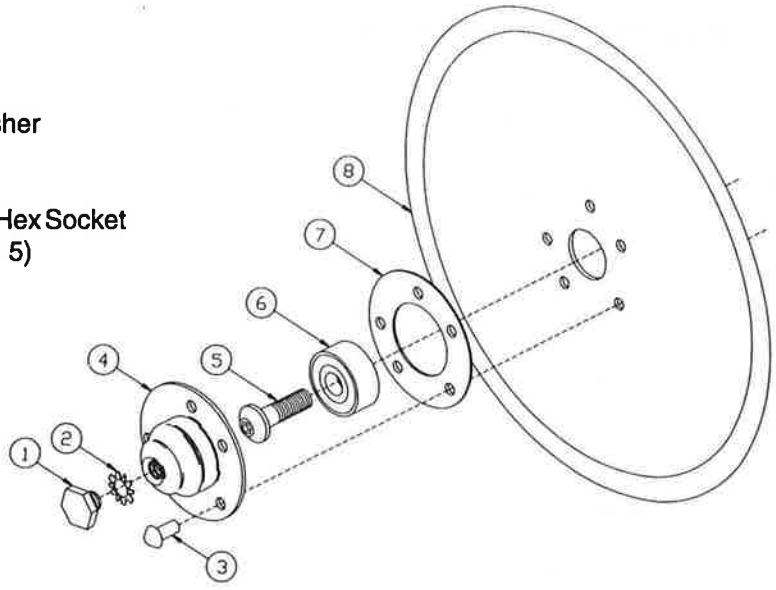

Cross 4" x 12" Hydraulic Cylinder 1½" Ram and ¾"-16 SAE Ports 466797

(Cross No. DB0400-01200-150-028586)

Figure 6-22

Item No.	Part No.	Description	Cross No.
1	461095	Rod, Clevis	3C4549
3		HEAD	1D1161-17
4	460907	Wiper	2A0773-824
5	465757	O-Ring	2A0283-7222
6	461186	O-Ring	2A0283-7342
7		Rod	1D0208-1725
9	461269	Piston	1D1401-400
10	460691	Nut	2A0235-6
11	461277	Backup	2A0010-342
12	461285	Piston Nut	2A0246-16
13	467700	Tube	1D0011-1412
15	466375	Clevis Base	1D1511-8
16		Tie Rod	2A0582-1700
17	461442	Nut	2A0236-10
18	463133	Clevis Pin	1D1551-16300
19	460469	Clip Pin	2A0308-1
20	460477	Cap Screw	2A0079-616
35	463067	Backup Washer	2A0006-222
	463372	Seal Kit	1C4637

Cross 4" x 8" Hydraulic Cylinder 1¼" Ram and ¾"-16 SAE Ports 465393

(Cross No. DE0400-00800-0125)

Figure 6-22

Item No.	Part No.	Description	Cross No.
1	461095	Rod, Clevis	3C4549
3	466367	Head	1D1161-8
4	460329	Wiper	2A0773-720
5	460337	O-Ring	2A0283-7218
6	461186	O-Ring	2A0283-7342
7	461194	Rod	1D0220-1488
9	461269	Piston	1D1401-400
10	460691	Nut, Clevis	2A0235-6
11	461277	Seal Backup	2A0010-342
12	461285	Piston Nut	2A0246-16
13	461293	Tube	1D0011-1012
15	466375	Clevis Base	1D1511-8
16	461384	Tie Rod	2A0582-1300
17	461442	Nut	2A0236-10
18	463133	Clevis Pin	1D1551-16300
19	460469	Clip Pin	2A0308-1
20	460477	Cap Screw	2A0079-616
21	461525	Depth Adjustment Screw	1D1977-1
22	463380	Depth Adjustment Nut	1D1952-1
23	463398	Retaining Ring	2A0467-175
35	463067	Backup Washer	2A0006-222
	~~463372~~	Seal Kit 461830	~~1C4637~~
38	463414	Screw Depth Assembly	1E6001-1

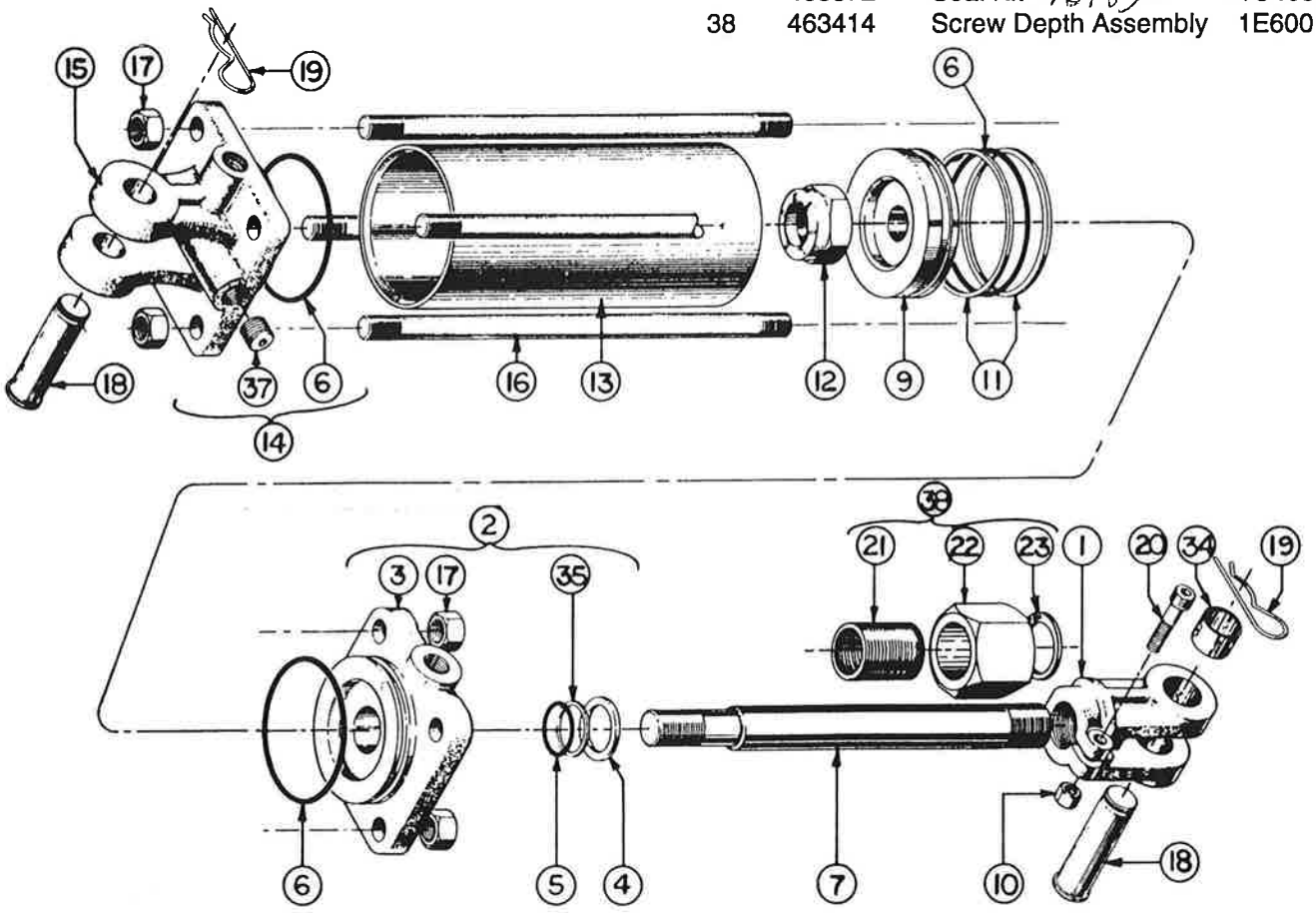

FIGURE 6-22

Troubleshooting

Problem	Solution
Reached limits on depth quadrant	Reposition top bolt in depth quadrant to remaining hole (up or down). Level drill front to back.
Unable to penetrate hard ground	Increase down pressure. Add suitcase weights to the weight bracket.
Press wheels ineffective	Add suitcase weights to the weight bracket. Level drill front to back with adjusting screw or hydraulic tongue cylinder.
Hairpinning residue	Residue tough due to wet soil or damp air. Wait for better conditions. Reduce speed (recommended speed 4-6 m.p.h.)
Opener pitching excessive dirt from seed zone	Soil too damp. Wait for better conditions. Reduce speed.
Trash plugging ahead of openers	Remove nosepieces to avoid catching long pieces of residue.
Openers pushing and plugging in minimum tillage or conventional	Loose residue in loose soil may require less down pressure. Reduce pressure. Remove spring. Till at shallower depth. Firm soil with packer or roller.
Unable to hold depth in worked soil.	Till at shallower depth. Use wider press wheels for more surface contact.

CrustBuster
SPEED KING INC.
P.O. Box 1438
Dodge City, Kansas 67801
(316) 227-7106